Email: sales@harlingentools.com
Web: www.harlingentools.com
Add: Via Codognino No. 4, 26854 Cornegliano Laudense (LO), Italy

HARLINGEN®

PSC CUTTING TOOLS & TOOLING SYSTEMS



2024/25



BORN IN ITALY

EUROPEAN SERVICE
CENTER - MAINTENANCE - WAREHOUSE

CHINA

MARKETING CENTER
R&D - CONSULTING - INSPECTION

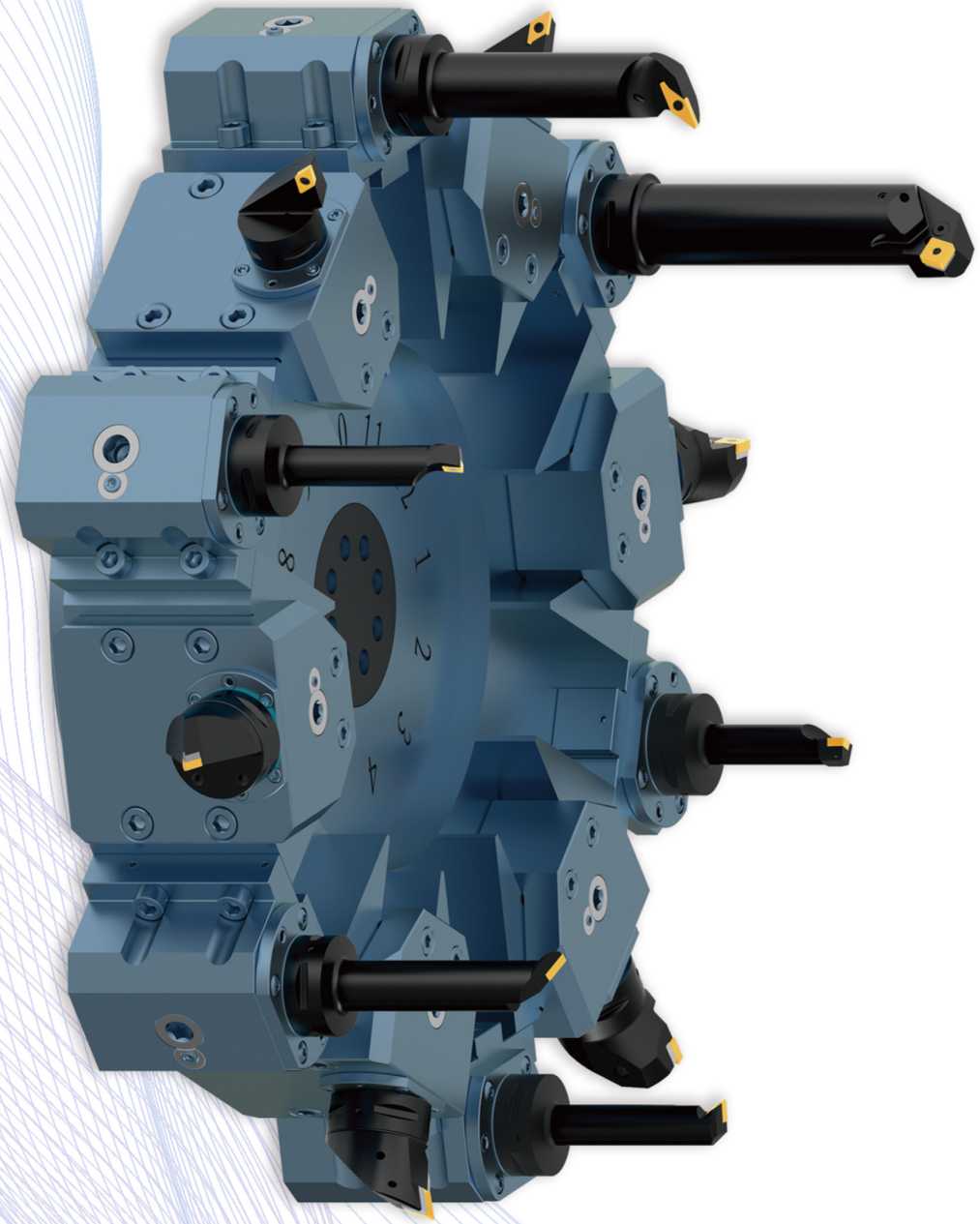

INTRODUCTION ABOUT PSC

PSC, in short of polygon shanks for stationary tools, is a modular tooling systems with tapered-polygon coupling which enables stable and high precision positioning and clamping between tapered-polygon interface and flange interface simultaneously.

● *HIGH TORQUE TRANSMISSION*

Both surfaces of the tapered-polygon and flange are positioned and clamped, providing an extraordinary high torque transmission and High bending strength resulting in excellent cutting performance and increasing productivity.

● *HIGH BASIC STABILITY AND ACCURACY*

By adapting PSC positioning and clamping, it is an ideal turning tool interface to guarantee repeated accuracy ±0.002mm from X, Y, Z axis, and reduce machine downtime.

● *REDUCED SET-UP TIME*

Time of set-up and tool change within 1 minute, leading to significantly increased machine utilization.

● *FLEXIBLE WITH EXTENSIVE MODULARITY*

It will cost fewer tools to process by the using of various arbors.

* Available in six sizes, PSC3-PSC10, Diameter. 32, 40, 50, 63, 80, and 100.



A

PSC CUTTING TOOLS

STEEL BLANK WITH PSC COUPLING



38-42 HRC
ISO 26623

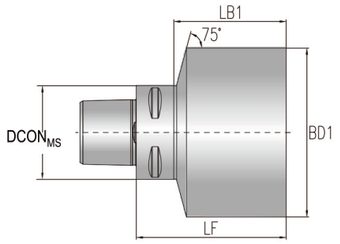

TYPE II

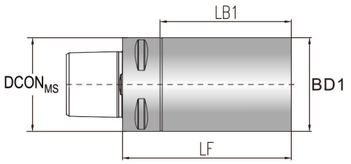

TYPE I

Order No.	Shank	DCON MS	Size (mm)			DGSN
			BD1	LF	LB 1	
182-00-001	PSC3	32	32	90	75	I
182-00-002	PSC3	32	60	90	75	II
182-00-003	PSC4	40	40	95	75	I
182-00-004	PSC4	40	60	165	145	II
182-00-005	PSC4	40	80	75	55	II
182-00-006	PSC4	40	100	85	65	II
182-00-007	PSC5	50	50	125	105	I
182-00-008	PSC5	50	75	175	155	II
182-00-009	PSC5	50	90	80	60	II
182-00-010	PSC5	50	110	90	70	II
182-00-011	PSC6	63	75	85	63	II
182-00-012	PSC6	63	75	195	173	II
182-00-013	PSC6	63	110	85	63	II
182-00-014	PSC6	63	110	120	98	II
182-00-015	PSC6	63	110	160	138	II
182-00-016	PSC6	63	130	95	73	II
182-00-017	PSC8	80	80	200	170	I
182-00-018	PSC8	80	130	95	65	II
182-00-019	PSC8	80	135	115	85	II
182-00-020	PSC10	100	100	200	164	I
182-00-021	PSC10	100	160	120	64	II

* Other sizes on enquiry

PSC-SCLCR/L



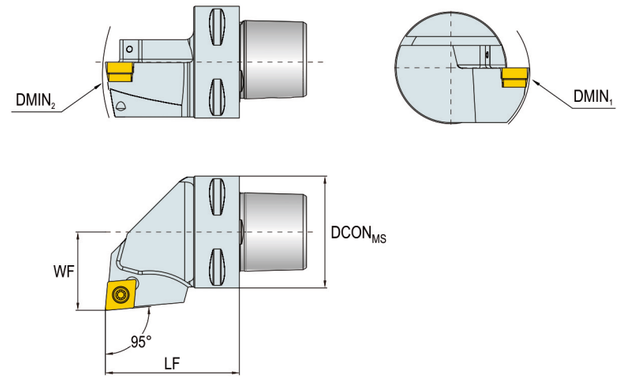

PRECISION COOLANT DESIGN
COOLANT PRESSURE 150 BAR

Order No.		Shank	Size(mm)					Insert	Shim	Shim Screw	Screw	Torx wrench	Hex wrench
Right hand	Left hand		DMIN1	DMIN2	DCONMS	LF	WF						
295-10-101	295-10-102	PSC3	265	700	32	40	22	CC..09T3..	SKCP-343	SRS-3	C035A12IP	T15IP	S3.5
295-10-103	295-10-104	PSC4	272	600	40	50	27						
295-10-105	295-10-106	PSC4	210	600	40	50	27	CC..1204..	SKCP-453	SRS-4	F040A14IP	T15IP	S4
295-10-107	295-10-108	PSC5	210	550	50	60	35						
295-10-109	295-10-110	PSC6	210	800	63	65	45						

* Insert Not Included

PSC-SCLCR/L



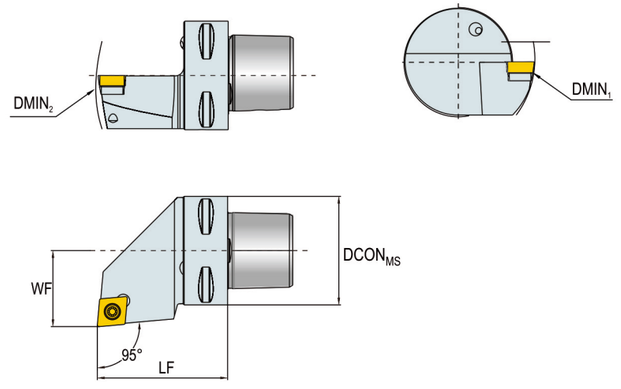

CONVENTIONAL COOLANT
COOLANT PRESSURE 40 BAR

Order No.		Shank	Size(mm)					Insert	Shim	Shim Screw	Screw	Torx wrench	Hex wrench
Right hand	Left hand		DMIN 1	DMIN2	DCONMS	LF	WF						
295-10-201	295-10-202	PSC3	130	116	32	40	22	CC..09T3..	SKCP-343	SRS-3	C035A12IP	T15IP	S3.5
295-10-203	295-10-204	PSC4	130	140	40	50	27						
295-10-205	295-10-206	PSC5	130	165	50	60	35						
295-10-207	295-10-208	PSC6	130	190	63	65	45						
295-10-209	295-10-210	PSC3	125	116	32	40	22	CC..1204..	SKCP-453	SRS-4	F040A14IP	T15IP	S4
295-10-211	295-10-212	PSC4	125	140	40	50	27						
295-10-213	295-10-214	PSC5	125	165	50	60	35						
295-10-215	295-10-216	PSC6	125	190	63	65	45						

* Insert Not Included

PSC-SDJCR/L



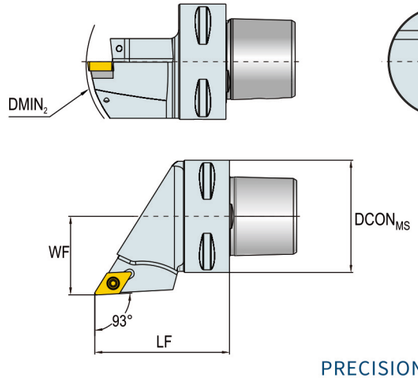

PRECISION COOLANT DESIGN
COOLANT PRESSURE 150 BAR

Order No.		Shank	Size(mm)					Insert	Shim	Shim Screw	Screw	Torx wrench	Hex wrench
Right hand	Left hand		DMIN1	DMIN2	DCONMS	LF	WF						
295-11-101	295-11-102	PSC3	244	135	32	40	22	DC..11T3..	SKDP-343	SRS-3	C035A12IP	T15IP	S3.5
295-11-103	295-11-104	PSC4	246	140	40	50	27						
295-11-105	295-11-106	PSC5	250	165	50	60	35						
295-11-107	295-11-108	PSC6	250	190	63	65	45						

* Insert Not Included

PSC-SDJCR/L



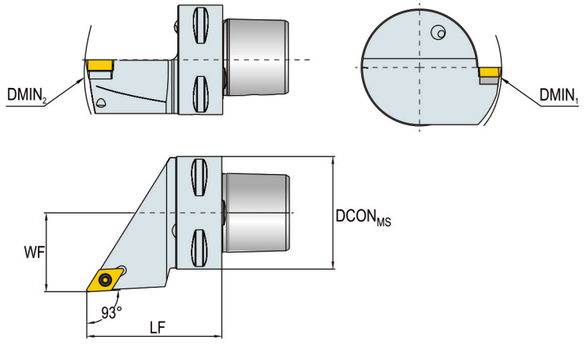

CONVENTIONAL COOLANT
COOLANT PRESSURE 40 BAR

Order No.		Shank	Size(mm)					Insert	Shim	Shim Screw	Screw	Torx wrench	Hex wrench
Right hand	Left hand		DMIN 1	DMIN 2	DCONMS	LF	WF						
295-11-201	295-11-202	PSC3	70	116	32	40	22	DC..0702..	—	—	C025A05IP	T8IP	—
295-11-203	295-11-204	PSC4	70	116	40	50	27						
295-11-205	295-11-206	PSC3	244	135	32	40	22	DC..11T3..	SKDP-343	SRS-3	C035A12IP	T15IP	S3.5
295-11-207	295-11-208	PSC4	246	140	40	50	27						
295-11-209	295-11-210	PSC5	250	165	50	60	35						
295-11-211	295-11-212	PSC6	250	190	63	65	45						

* Insert Not Included

PSC-SCMCN



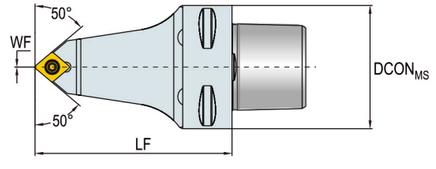

CONVENTIONAL COOLANT
COOLANT PRESSURE 40 BAR

Order No.	Shank	Size(mm)			Insert	Shim	Shim Screw	Screw	Torx wrench	Hex wrench
		DCONMS	LF	WF						
295-10-001	PSC6	63	90	0	CC..1204..	SKCP-453	SRS-4	F040A14IP	T15IP	S4

* Insert Not Included

PSC-SDNCN



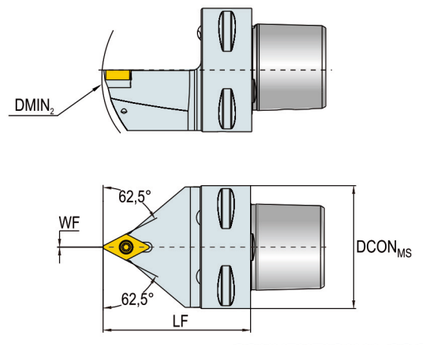

CONVENTIONAL COOLANT
COOLANT PRESSURE 40 BAR

Order No.	Shank	Size(mm)				Insert	Shim	Shim Screw	Screw	Torx wrench	Hex wrench
		DMIN2	DCONMS	LF	WF						
295-11-001	PSC3	116	32	40	0	DC..11T3..	SKDP-343	SRS-3	C035A12IP	T15IP	S3.5
295-11-002	PSC4	140	40	50	0						
295-11-003	PSC5	165	50	60	0						

* Insert Not Included

PSC-SRSCR/L



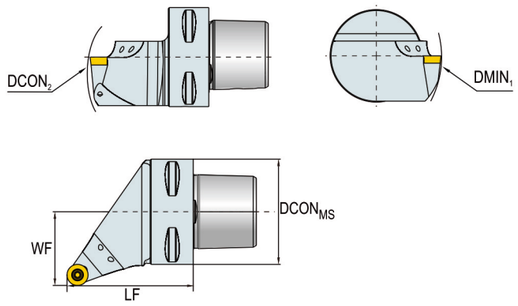

PRECISION COOLANT DESIGN
COOLANT PRESSURE 150 BAR

Order No.		Shank	Size(mm)					Insert	Screw	Torx wrench
Right hand	Left hand		DMIN1	DMIN2	DCONMS	LF	WF			
295-15-101	295-15-102	PSC5	130	270	50	60	35	RC..1003MO	C035A08IP	T15IP
295-15-103	295-15-104	PSC6	140	300	63	65	45			
295-15-105	295-15-106	PSC5	130	270	50	60	35	RC..1204MO	C040A11IP	T15IP
295-15-107	295-15-108	PSC5	150	165	50	60	35			
295-15-109	295-15-110	PSC6	120	195	63	65	45			
295-15-111	295-15-112	PSC6	150	190	63	65	45			
295-15-113	295-15-114	PSC5	175	165	50	60	35	RC..1606MO	C050A18IP	T20IP
295-15-115	295-15-116	PSC6	175	190	63	65	45			

* Insert Not Included

PSC-SRSCR/L



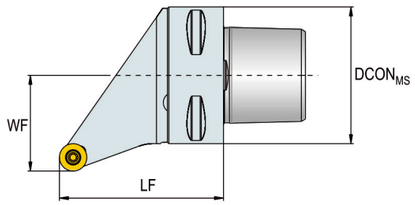

CONVENTIONAL COOLANT
COOLANT PRESSURE 40 BAR

Order No.		Shank	Size(mm)			Insert	Screw	Torx wrench
Right hand	Left hand		DCONMS	LF	WF			
295-15-201	295-15-202	PSC3	32	40	22	RC..1003MO	C035A08IP	T15IP
295-15-203	295-15-204	PSC4	40	50	27			
295-15-205	295-15-206	PSC5	50	60	35			
295-15-207	295-15-208	PSC6	63	65	45			
295-15-209	295-15-210	PSC4	40	50	27	RC..1204MO	C040A11IP	T15IP
295-15-211	295-15-212	PSC5	50	60	35			
295-15-213	295-15-214	PSC6	63	65	45			
295-15-215	295-15-216	PSC5	50	60	35	RC..1606MO	C050A18IP	T20IP
295-15-217	295-15-218	PSC6	63	65	45			

* Insert Not Included

PSC-SVJBR/L



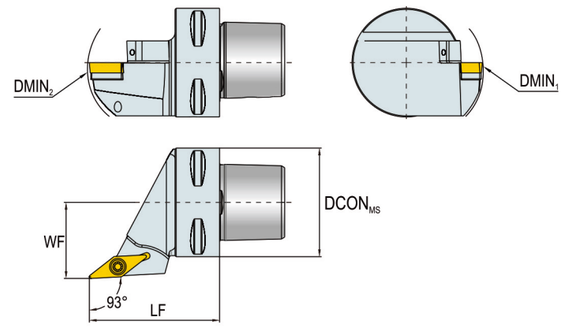

PRECISION COOLANT DESIGN
COOLANT PRESSURE 150 BAR

Order No.		Shank	Size(mm)					Insert	Shim	Shim Screw	Screw	Torx wrench	Hex wrench
Right hand	Left hand		DMIN1	DMIN2	DCONMS	LF	WF						
295-14-105	295-14-106	PSC3	368	116	32	40	22	VB..1103..	—	—	C025A07IP	T8IP	—
295-14-107	295-14-108	PSC4	434	140	40	50	27						
295-14-109	295-14-110	PSC4	270	140	40	50	27	VB..1604..	SKVN-343	SRS-3	C035A12IP	T15IP	S3.5
295-14-111	295-14-112	PSC5	270	165	50	60	35						
295-14-113	295-14-114	PSC6	270	190	63	65	45						
295-14-115	295-14-116	PSC8	270	248	80	80	55						

* Insert Not Included

PSC-SVJBR/L



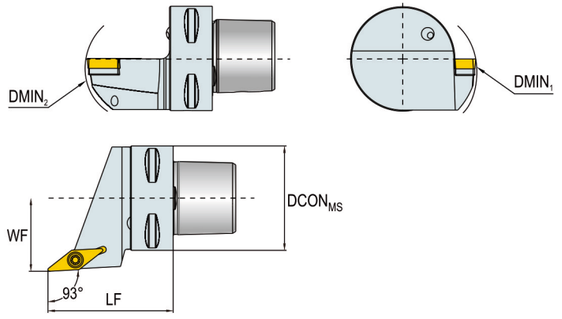

CONVENTIONAL COOLANT
COOLANT PRESSURE 40 BAR

Order No.		Shank	Size(mm)					Insert	Shim	Shim Screw	Screw	Torx wrench	Hex wrench
Right hand	Left hand		DMIN1	DMIN2	DCONMS	LF	WF						
295-14-213	295-14-214	PSC3	105	116	32	40	22	VB..1103..	—	—	C025A07IP	T8IP	—
295-14-215	295-14-216	PSC4	105	140	40	50	27						
295-14-217	295-14-218	PSC5	125	165	50	60	35						
295-14-219	295-14-220	PSC4	155	140	40	50	27	VB..1604..	SKVN-343	SRS-3	C035A12IP	T15IP	S3.5
295-14-221	295-14-222	PSC5	155	165	50	60	35						
295-14-223	295-14-224	PSC6	155	190	63	65	45						

* Insert Not Included

PSC-SRDCN



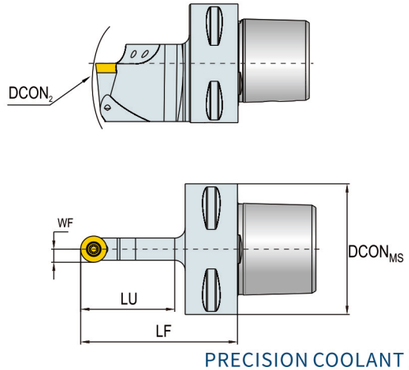

PRECISION COOLANT DESIGN
COOLANT PRESSURE 150 BAR

Order No.	Shank	Size(mm)					Insert	Screw	Torx wrench
		DMIN2	DCONMS	LU	LF	WF			
295-15-301	PSC5	165	50	25	60	5	RC..1003MO	C035A08IP	T15IP
295-15-302	PSC4	140	40	28	50	6	RC..1204MO	C040A11IP	T15IP
295-15-303	PSC5	165	50	28	60	6			
295-15-304	PSC6	190	63	28	65	6			
295-15-305	PSC6	190	63	35	65	8	RC..1606MO	C050A18IP	T20IP

* Insert Not Included

PSC-SRDCN



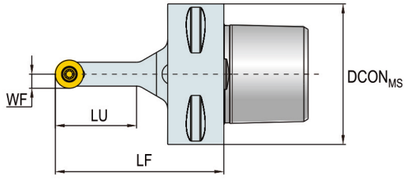

CONVENTIONAL COOLANT
COOLANT PRESSURE 40 BAR

Order No.	Shank	Size(mm)				Insert	Screw	Torx wrench
		DCONMS	LU	LF	WF			
295-15-001	PSC4	40	25	50	5	RC..1003MO	C035A08IP	T15IP
295-15-002	PSC5	50	25	60	5			
295-15-003	PSC6	63	25	65	5			
295-15-004	PSC4	40	28	50	6	RC..1204MO	C040A11IP	T15IP
295-15-005	PSC5	50	28	60	6			
295-15-006	PSC6	63	28	65	6			
295-15-007	PSC5	50	35	60	8	RC..1606MO	C050A18IP	T20IP
295-15-008	PSC6	63	35	65	8			

* Insert Not Included

PSC-SVHBR/L



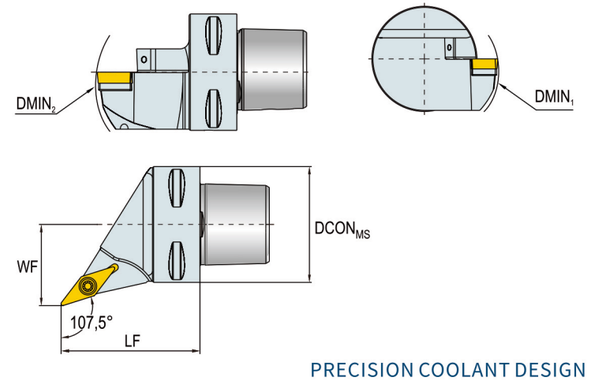

PRECISION COOLANT DESIGN
COOLANT PRESSURE 150 BAR

Order No.		Shank	Size(mm)					Insert	Shim	Shim Screw	Screw	Torx wrench	Hex wrench
Right hand	Left hand		DMIN1	DMIN2	DCONMS	LF	WF						
295-14-117	295-14-118	PSC4	124	140	40	50	27	VB..1604..	SKVN-343	SRS-3	C035A12IP	T15IP	S3.5
295-14-119	295-14-120	PSC5	124	165	50	60	35						
295-14-121	295-14-122	PSC6	134	190	63	65	45						

* Insert Not Included

PSC-SVHBR/L



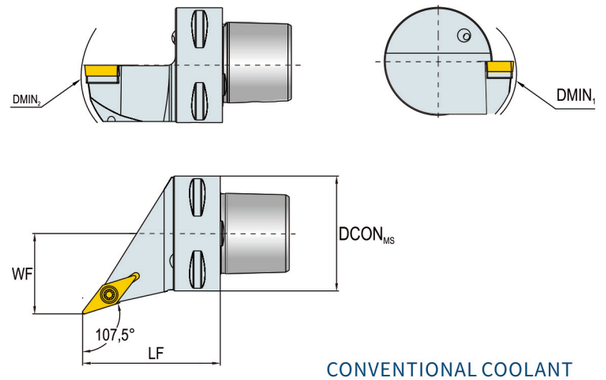

CONVENTIONAL COOLANT
COOLANT PRESSURE 40 BAR

Order No.		Shank	Size(mm)					Insert	Shim	Shim Screw	Screw	Torx wrench	Hex wrench
Right hand	Left hand		DMIN1	DMIN2	DCONMS	LF	WF						
295-14-201	295-14-202	PSC3	55	116	32	40	22	VB..1103..	—	—	C025A07IP	T8IP	—
295-14-203	295-14-204	PSC4	55	140	40	50	27						
295-14-205	295-14-206	PSC5	65	165	50	60	35						
295-14-207	295-14-208	PSC4	95	140	40	50	27	VB..1604..	SKVN-343	SRS-3	C035A12IP	T15IP	S3.5
295-14-209	295-14-210	PSC5	95	165	50	60	35						
295-14-211	295-14-212	PSC6	95	190	63	65	45						

* Insert Not Included

PSC-SCLCR/L



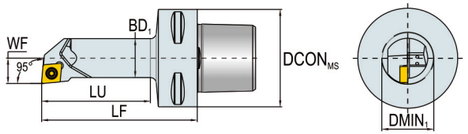

PRECISION COOLANT DESIGN
COOLANT PRESSURE 150 BAR

Order No.		Shank	Size(mm)						Insert	Screw	Torx wrench
Right hand	Left hand		DMIN1	DCONMS	BD1	LU	LF	WF			
205-10-101	205-10-102	PSC3	21.5	32	16	48	65	11	CC..09T3..	C035A08IP	T15IP
205-10-103	205-10-104	PSC4	21.5	40	16	47	70	11			
205-10-105	205-10-106	PSC4	25	40	20	57	80	13			
205-10-107	205-10-108	PSC5	21.5	50	16	46	70	11			
205-10-109	205-10-110	PSC5	25	50	20	56	80	13			
205-10-111	205-10-112	PSC4	32	40	25	69	90	17	CC..1204..	C050A12IP	T20IP
205-10-113	205-10-114	PSC5	32	50	25	67	90	17			

* Insert Not Included

PSC-SCLCR/L



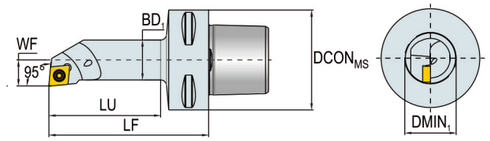

CONVENTIONAL COOLANT
COOLANT PRESSURE 40 BAR

Order No.		Shank	Size(mm)						Insert	Shim	Shim Screw	Screw	Torx wrench	Hex wrench
Right hand	Left hand		DMIN1	DCONMS	BD1	LU	LF	WF						
205-10-201	205-10-202	PSC3	20	32	16	48	65	11	CC..09T3..	—	—	C035A08IP	T15IP	—
205-10-203	205-10-204	PSC3	25	32	20	58	75	13						
205-10-205	205-10-206	PSC3	32	32	25	74	90	13						
205-10-207	205-10-208	PSC4	20	40	16	47	70	11						
205-10-209	205-10-210	PSC4	25	40	20	57	80	13						
205-10-211	205-10-212	PSC4	32	40	25	68	90	17						
205-10-213	205-10-214	PSC4	50	40	40	60	80	27		SKCP-343	SRS-3	C035A12IP	T15IP	S3.5
205-10-215	205-10-216	PSC5	20	50	16	46	70	11		—	—	C035A08IP	T15IP	—
205-10-217	205-10-218	PSC5	25	50	20	56	80	13						
205-10-219	205-10-220	PSC5	32	50	25	67	90	17						
205-10-221	205-10-222	PSC3	32	32	25	74	90	17	CC..1204..	—	—	C050A12IP	T20IP	—
205-10-223	205-10-224	PSC3	40	32	32	81	96	22		SKCP-453	SRS-4	F040A14IP	T15IP	S4
205-10-225	205-10-226	PSC4	40	40	32	89	110	22						
205-10-227	205-10-228	PSC5	40	50	32	88	110	22						
205-10-229	205-10-230	PSC5	50	50	40	119	140	27						
205-10-231	205-10-232	PSC5	63	50	50	80	100	35						

* Insert Not Included

PSC-SVVBN



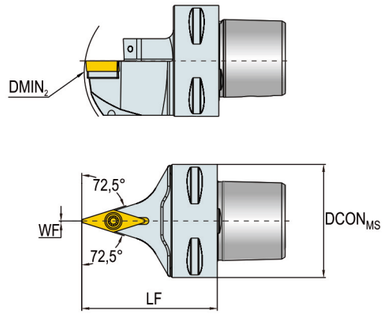

PRECISION COOLANT DESIGN
COOLANT PRESSURE 150 BAR

Order No.	Shank	Size(mm)				Insert	Shim	Shim Screw	Screw	Torx wrench	Hex wrench
		DMIN2	DCONMS	LF	WF						
295-14-301	PSC4	145	40	60	0	VB..1604..	SKVN-343	SRS-3	C035A12IP	T15IP	S3.5
295-14-302	PSC5	165	50	60	0						
295-14-303	PSC6	190	63	65	0						

* Insert Not Included

PSC-SVUBR/L



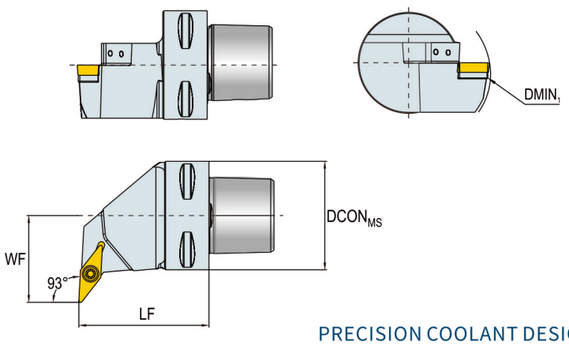

PRECISION COOLANT DESIGN
COOLANT PRESSURE 150 BAR

Order No.		Shank	Size(mm)				Insert	Shim	Shim Screw	Screw	Torx wrench	Hex wrench
Right hand	Left hand		DMIN1	DCONMS	LF	WF						
295-14-101	295-14-102	PSC6	85	63	65	45	VB..1604..	SKVN-343	SRS-3	C035A12IP	T15IP	S3.5
295-14-103	295-14-104	PSC6	100	85	80	55						

* Insert Not Included

PSC-SDUCR/L



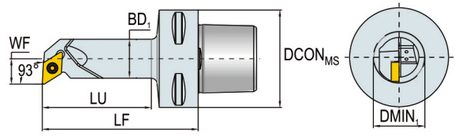

PRECISION COOLANT DESIGN
COOLANT PRESSURE 150 BAR

Order No.		Shank	Size(mm)						Insert	Screw	Torx wrench
Right hand	Left hand		$DIMN_1$	$DCON_{MS}$	BD_1	LU	LF	WF			
205-11-101	205-11-102	PSC4	25	40	20	58	80	13	DC..0702..	C025A05IP	T8IP
205-11-103	205-11-104	PSC4	25	40	20	58	80	13	DC..11T3..	C035A08IP	T15IP
205-11-105	205-11-106	PSC4	32	40	25	69	90	17			
205-11-107	205-11-108	PSC5	25	50	20	56	80	13			
205-11-109	205-11-110	PSC5	32	50	25	67	90	17			

* Insert Not Included

PSC-SDUCR/L



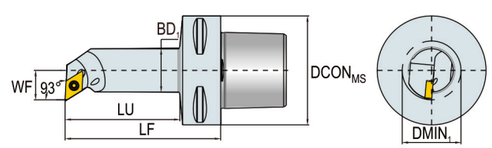

CONVENTIONAL COOLANT
COOLANT PRESSURE 40 BAR

Order No.		Shank	Size(mm)						Insert	Shim	Shim Screw	Screw	Torx wrench	Hex wrench
Right hand	Left hand		$DIMN_1$	$DCON_{MS}$	BD_1	LU	LF	WF						
205-11-201	205-11-202	PSC3	20	32	16	48	65	11	DC..0702..	—	—	C025A05IP	T8IP	—
205-11-203	205-11-204	PSC4	20	40	16	47	70	11						
205-11-205	205-11-206	PSC5	20	50	16	46	70	11						
205-11-207	205-11-208	PSC3	25	32	20	58	75	13	DC..11T3..	—	—	C035A08IP	T15IP	—
205-11-209	205-11-210	PSC3	32	32	25	73	90	17						
205-11-211	205-11-212	PSC4	25	40	20	57	80	13						
205-11-213	205-11-214	PSC4	32	40	25	68	90	17						
205-11-215	205-11-216	PSC4	40	40	32	89	110	22		SKDP-343	SRS-3	C035A12IP	T15IP	S3.5
205-11-217	205-11-218	PSC4	50	40	40	60	80	27						
205-11-219	205-11-220	PSC5	25	50	20	56	80	13		—	—	C035A08IP	T15IP	—
205-11-221	205-11-222	PSC5	32	50	25	67	90	17						
205-11-223	205-11-224	PSC5	40	50	32	88	110	22		SKDP-343	SRS-3	C035A12IP	T15IP	S3.5
205-11-225	205-11-226	PSC5	63	50	50	80	100	35						

* Insert Not Included

PSC-SVVBN



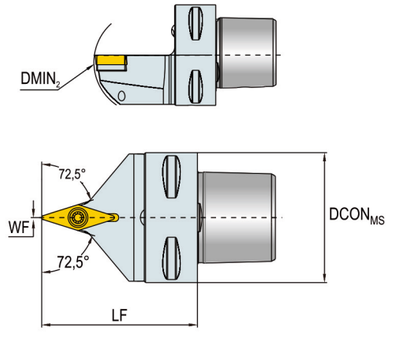

CONVENTIONAL COOLANT
COOLANT PRESSURE 40 BAR

Order No.	Shank	Size(mm)				Insert	Shim	Shim Screw	Screw	Torx wrench	Hex wrench
		$DIMN_2$	$DIMN_{MS}$	LF	WF						
295-14-001	PSC4	140	40	50	0	VB..1604..	SKVN-343	SRS-3	C035A12IP	T15IP	S3.5
295-14-002	PSC5	165	50	60	0						
295-14-003	PSC6	190	63	65	0						

* Insert Not Included

PSC-SSKCR/L

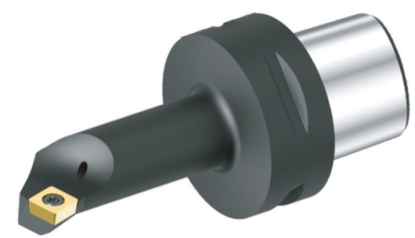

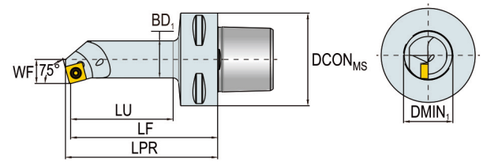

CONVENTIONAL COOLANT
COOLANT PRESSURE 40 BAR

Order No.		Shank	Size(mm)							Insert	Screw	Torx wrench
Right hand	Left hand		$DIMN_1$	$DCON_{MS}$	BD_1	LU	LPR	LF	WF			
205-12-201	205-12-202	PSC4	25	40	20	58	82.2	80	13	SC..09T3..	C035A08IP	T15IP
205-12-203	205-12-204	PSC5	25	50	20	56	82.2	80	13			

* Insert Not Included

PSC-STFCR/L



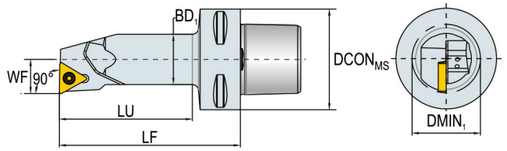

PRECISION COOLANT DESIGN
COOLANT PRESSURE 150 BAR

Order No.		Shank	Size(mm)						Insert	Shim	Shim Screw	Screw	Torx wrench	Hex wrench
Right hand	Left hand		DMIN1	DCONMS	BD1	LU	LF	WF						
205-13-101	205-13-102	PSC4	20	40	16	47	70	11	TC..1102..	—	—	C025A05IP	T8IP	—
205-13-103	205-13-104	PSC4	25	40	20	57	80	13						
205-13-105	205-13-106	PSC4	32	40	25	69	90	17	TC..16T3..	—	—	C035A08IP	T15IP	—
205-13-107	205-13-108	PSC5	32	50	25	67	90	17						
205-13-109	205-13-110	PSC5	40	50	32	88	110	22		SKDP-343	SRS-3	C035A12IP	T15IP	S3.5

* Insert Not Included

PSC-STFCR/L



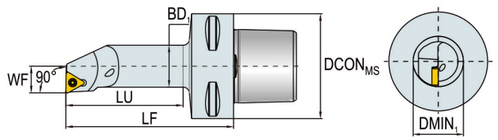

CONVENTIONAL COOLANT
COOLANT PRESSURE 40 BAR

Order No.		Shank	Size(mm)						Insert	Shim	Shim Screw	Screw	Torx wrench	Hex wrench
Right hand	Left hand		DMIN1	DCONMS	BD1	LU	LF	WF						
205-13-201	205-13-202	PSC4	20	40	16	47	70	11	TC..1102..	—	—	C025A05IP	T8IP	—
205-13-203	205-13-204	PSC4	25	40	20	57	80	13						
205-13-205	205-13-206	PSC5	20	50	16	46	70	11						
205-13-207	205-13-208	PSC5	25	50	20	56	80	13						
205-13-209	205-13-210	PSC4	40	40	32	89	110	22	TC..16T3..	SKDP-343	SRS-3	C035A12IP	T15IP	S3.5

* Insert Not Included

PSC-SVQBR/L



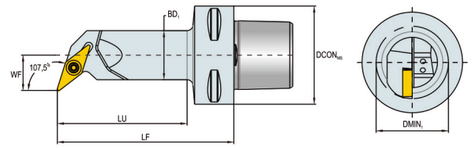

PRECISION COOLANT DESIGN
COOLANT PRESSURE 150 BAR

Order No.		Shank	Size(mm)						Insert	Shim	Shim Screw	Screw	Torx wrench	Hex wrench
Right hand	Left hand		DMIN1	DCONMS	BD1	LU	LF	WF						
205-14-101	205-14-102	PSC4	25	40	20	47	70	13	VB..1103..	—	—	C025A05IP	T8IP	—
205-14-103	205-14-104	PSC4	33	40	25	68	90	18	VB..16T3..	—	—	C035A08IP	T15IP	—
205-14-105	205-14-106	PSC5	33	50	25	67	90	18						
205-14-107	205-14-108	PSC6	40	63	32	94	120	22		SKVN-343	SRS-3	C035A12IP	T15IP	S3.5

* Insert Not Included

PSC-SVQBR/L



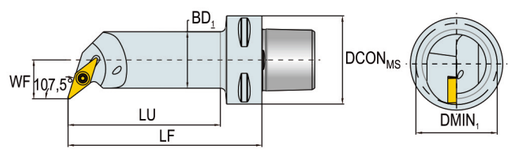

CONVENTIONAL COOLANT
COOLANT PRESSURE 40 BAR

Order No.		Shank	Size(mm)						Insert	Shim	Shim Screw	Screw	Torx wrench	Hex wrench
Right hand	Left hand		DMIN1	DCONMS	BD1	LU	LF	WF						
205-14-201	205-14-202	PSC4	25	40	20	48	70	13	VB..1103..	—	—	C025A05IP	T8IP	—
205-14-203	205-14-204	PSC4	27	40	20	58	80	15						
205-14-205	205-14-206	PSC5	27	50	20	56	80	15						
205-14-207	205-14-208	PSC4	33	40	25	68	90	18	VB..1604..	—	—	C035A08IP	T15IP	—
205-14-209	205-14-210	PSC4	40	40	32	89	110	22		SKVN-343	SRS-3	C035A12IP	T15IP	S3.5
205-14-211	205-14-212	PSC4	50	40	40	100	120	27						
205-14-213	205-14-214	PSC5	40	50	32	88	110	22						
205-14-215	205-14-216	PSC5	50	50	40	119	140	27						
205-14-217	205-14-218	PSC5	33	50	25	67	90	18		—	—	C035A08IP	T15IP	—
205-14-219	205-14-220	PSC5	63	50	50	130	150	35		SKVN-343	SRS-3	C035A12IP	T15IP	S3.5
205-14-221	205-14-222	PSC6	50	63	40	120	145	27						
205-14-223	205-14-224	PSC6	63	63	50	151	175	35						

* Insert Not Included

PSC-SDUCR/L



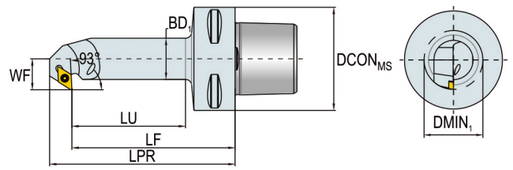

CONVENTIONAL COOLANT
COOLANT PRESSURE 40 BAR

Order No.		Shank	Size(mm)							Insert	Screw	Torx wrench
Right hand	Left hand		DMIN1	DCONMS	BD1	LU	LPR	LF	WF			
205-11-227	205-11-228	PSC4	22	40	16	47.3	81.5	70	13	DC..0702..	C025A05IP	T8IP
205-11-229	205-11-230	PSC4	27	40	20	57.9	91.5	80	15			
205-11-231	205-11-232	PSC4	32	40	25	68.5	101.5	90	18			
205-11-233	205-11-234	PSC5	32	50	25	67.2	101.5	90	18			
205-11-235	205-11-236	PSC5	27	50	20	56.5	91.5	80	15			

* Insert Not Included

PSC-DCLNR/L



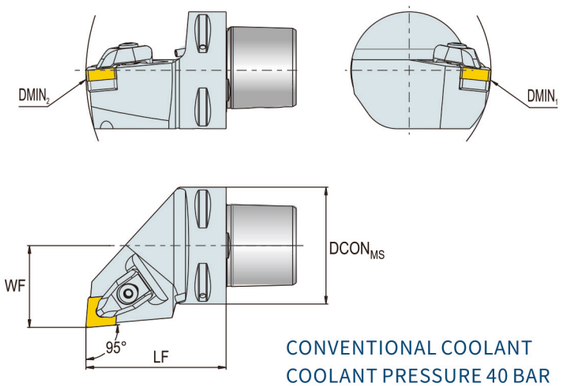

CONVENTIONAL COOLANT
COOLANT PRESSURE 40 BAR

Order No.		Shank	Size(mm)					Insert	Shim	Shim Screw	Clamp	Hex wrench
Right hand	Left hand		DMIN1	DMIN2	DCONMS	LF	WF					
295-22-201	295-22-202	PSC3	60	121	32	45	22	CN..1204..	DCSN-444	C040A09IP	DL-04	S3
295-22-203	295-22-204	PSC4	110	140	40	50	27					
295-22-205	295-22-206	PSC5	110	165	50	60	35					
295-22-207	295-22-208	PSC6	110	190	63	65	45					
295-22-209	295-22-210	PSC8	110	250	80	80	55					
295-22-211	295-22-212	PSC4	125	145	40	55	27	CN..1606..	DCSN-544	C050A12IP	DL-05	S4
295-22-213	295-22-214	PSC5	125	165	50	60	35					
295-22-215	295-22-216	PSC6	125	190	63	65	45					
295-22-217	295-22-218	PSC8	125	250	80	80	55					
295-22-219	295-22-220	PSC5	80	165	50	60	35	CN..1906..	DCSN-634	L60 M6*12	DL-06	S4
295-22-221	295-22-222	PSC6	81	190	63	65	45					
295-22-223	295-22-224	PSC8	100	250	80	80	55					

* Insert Not Included

PSC-DDUNR/L



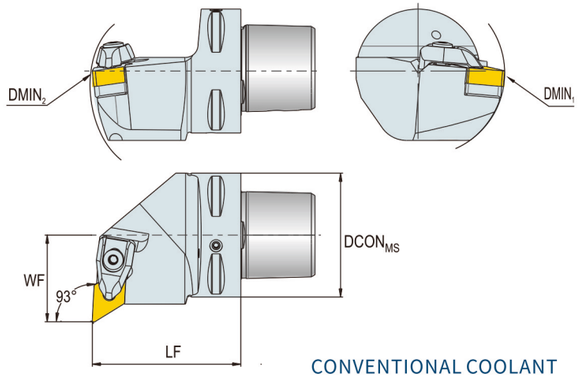

CONVENTIONAL COOLANT
COOLANT PRESSURE 40 BAR

Order No.		Shank	Size(mm)					Insert	Shim	Shim Screw	Clamp	Hex wrench
Right hand	Left hand		DMIN1	DMIN2	DCONMS	LF	WF					
295-23-201	295-23-202	PSC4	110	140	40	50	27	DN..1506..	DDSN-434	C040A09IP	DL-04	S3
295-23-203	295-23-204	PSC5	110	165	50	60	35					
295-23-205	295-23-206	PSC6	110	190	63	65	45					
295-23-207	295-23-208	PSC8	110	250	80	80	55					

* Insert Not Included

PSC-DCKNR/L



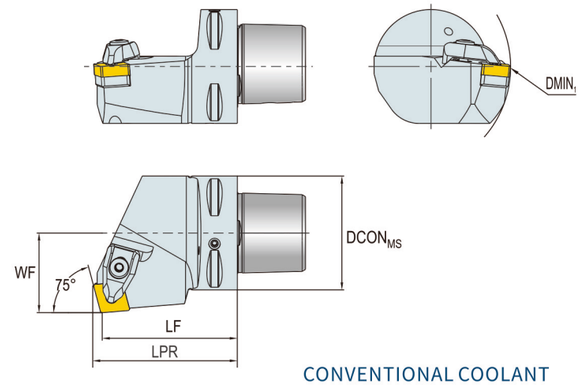

CONVENTIONAL COOLANT
COOLANT PRESSURE 40 BAR

Order No.		Shank	Size(mm)					Insert	Shim	Shim Screw	Clamp	Hex wrench
Right hand	Left hand		DMIN1	DCONMS	LPR	LF	WF					
295-22-225	295-22-226	PSC4	110	40	53.1	50	27	CN..1204..	DCSN-444	C040A09IP	DL-04	S3
295-22-227	295-22-228	PSC5	110	50	63.1	60	35					
295-22-229	295-22-230	PSC6	110	63	68.1	65	45					
295-22-231	295-22-232	PSC5	125	50	63.8	60	35	CN..1606..	DCSN-544	C050A12IP	DL-05	S4
295-22-233	295-22-234	PSC6	125	63	68.8	65	45					
295-22-235	295-22-236	PSC6	81	63	74.6	65	45	CN..1906..	DCSN-634	L60 M6*12	DL-06	S4
295-22-237	295-22-238	PSC8	100	80	89.6	80	55					

* Insert Not Included

PSC-DCRNR/L



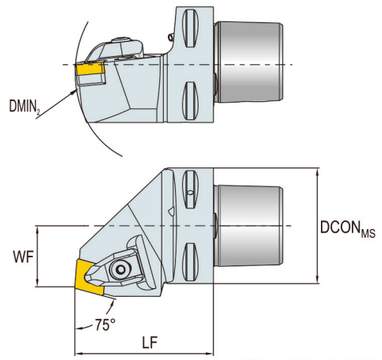

CONVENTIONAL COOLANT
COOLANT PRESSURE 40 BAR

Order No.		Shank	Size(mm)				Insert	Shim	Shim Screw	Clamp	Hex wrench
Right hand	Left hand		DMIN2	DCONMS	LF	WF					
295-22-239	295-22-240	PSC4	140	40	50	22	CN..1204..	DCSN-444	C040A09IP	DL-04	S3
295-22-241	295-22-242	PSC5	165	50	60	27					
295-22-243	295-22-244	PSC6	190	63	65	35					
295-22-245	295-22-246	PSC5	165	50	60	27	CN..1606..	DCSN-544	C050A12IP	DL-05	S3
295-22-247	295-22-248	PSC6	190	63	65	35					
295-22-249	295-22-250	PSC8	250	80	80	55					
295-22-251	295-22-252	PSC6	190	63	65	35	CN..1906..	DCSN-634	L60 M6*12	DL-06	S4
295-22-253	295-22-254	PSC8	250	80	80	55					

* Insert Not Included

PSC-DDNNN



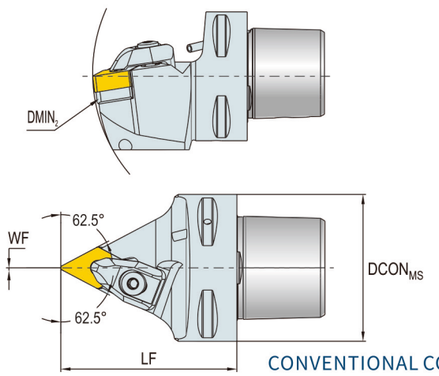

CONVENTIONAL COOLANT
COOLANT PRESSURE 40 BAR

Order No.	Shank	Size(mm)				Insert	Shim	Shim Screw	Clamp	Hex wrench
		DMIN2	DCONMS	LF	WF					
295-23-001	PSC4	140	40	50	0	DN..1104..	DDSN-322	C030A07IP	DL-03	S2.5
295-23-002	PSC4	145	40	55	0	DN..1506..	DDSN-434	C040A09IP	DL-04	S3
295-23-003	PSC5	165	50	60	0					
295-23-004	PSC6	190	63	65	0					
295-23-005	PSC8	250	80	80	0					

* Insert Not Included

PSC-DDHNR/L



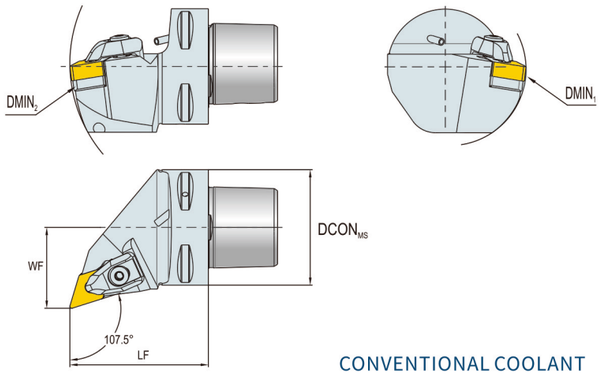

CONVENTIONAL COOLANT
COOLANT PRESSURE 40 BAR

Order No.		Shank	Size(mm)					Insert	Shim	Shim Screw	Clamp	Hex wrench
Right hand	Left hand		DMIN1	DMIN2	DCONMS	LF	WF					
295-23-209	295-23-210	PSC4	110	145	40	55	27	DN..1506..	DDSN-434	C040A09IP	DL-04	S3
295-23-211	295-23-212	PSC5	110	165	50	60	35					
295-23-213	295-23-214	PSC6	110	190	63	65	45					
295-23-215	295-23-216	PSC8	110	250	80	80	55					

* Insert Not Included

PSC-DDJNR/L



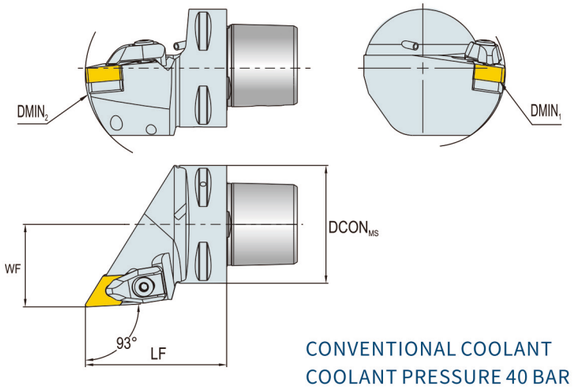

CONVENTIONAL COOLANT
COOLANT PRESSURE 40 BAR

Order No.		Shank	Size(mm)					Insert	Shim	Shim Screw	Clamp	Hex wrench
Right hand	Left hand		DMIN1	DMIN2	DCONMS	LF	WF					
295-23-217	295-23-218	PSC3	60	121	32	45	22	DN..1104..	DDSN-322	C030A07IP	DL-03	S2.5
295-23-219	295-23-220	PSC4	60	140	40	50	27					
295-23-221	295-23-222	PSC5	65	165	50	60	35					
295-23-223	295-23-224	PSC4	110	145	40	55	27	DN..1506..	DDSN-434	C040A09IP	DL-04	S3
295-23-225	295-23-226	PSC5	110	165	50	60	35					
295-23-227	295-23-228	PSC6	110	190	63	65	45					
295-23-229	295-23-230	PSC8	110	250	80	80	55					

* Insert Not Included

PSC-DVJNR/L



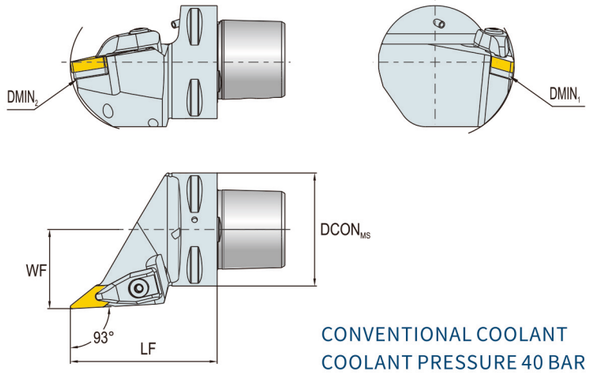

CONVENTIONAL COOLANT
COOLANT PRESSURE 40 BAR

Order No.		Shank	Size(mm)					Insert	Shim	Shim Screw	Clamp	Hex wrench
Right hand	Left hand		DMIN1	DMIN2	DCONMS	LF	WF					
295-24-201	295-24-202	PSC4	60	152	40	62	27	VN..1604..	DVSN-322	C035A08IP	DL-03L	S3
295-24-203	295-24-204	PSC5	65	170	50	65	35					
295-24-205	295-24-206	PSC6	81	190	63	65	45					
295-24-207	295-24-208	PSC8	100	250	80	80	55					

* Insert Not Included

PSC-DWLNR/L



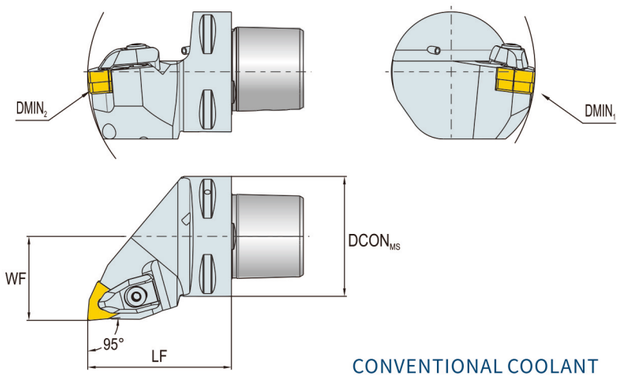

CONVENTIONAL COOLANT
COOLANT PRESSURE 40 BAR

Order No.		Shank	Size(mm)					Insert	Shim	Shim Screw	Clamp	Hex wrench
Right hand	Left hand		DMIN1	DMIN2	DCONMS	LF	WF					
295-25-201	295-25-202	PSC3	60	116	32	40	22	WN..0604..	DWSN-322	C030A07IP	DL-03	S2.5
295-25-203	295-25-204	PSC4	60	140	40	50	27					
295-25-205	295-25-206	PSC5	65	165	50	60	35					
295-25-207	295-25-208	PSC6	81	190	63	65	45					
295-25-209	295-25-210	PSC4	110	140	40	50	27	WN..0804..	DWSN-434	C040A09IP	DL-04	S3
295-25-211	295-25-212	PSC5	110	165	50	60	35					
295-25-213	295-25-214	PSC6	110	190	63	65	45					
295-25-215	295-25-216	PSC8	110	250	80	80	55					

* Insert Not Included

PSC-DVVNN



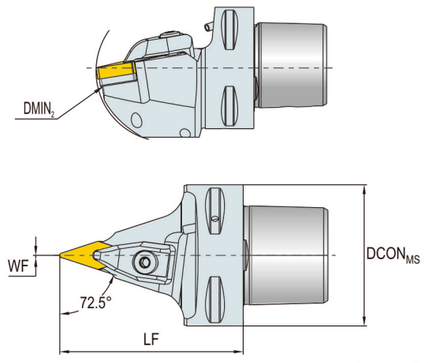

CONVENTIONAL COOLANT
COOLANT PRESSURE 40 BAR

Order No.	Shank	Size(mm)				Insert	Shim	Shim Screw	Clamp	Hex wrench
		DMIN2	DCONMS	LF	WF					
295-24-001	PSC4	152	40	62	0.6	VN..1604..	DVSN-322	C035A08IP	DL-03L	S3
295-24-002	PSC5	170	50	65	0.6					
295-24-003	PSC6	190	63	65	0.6					
295-24-004	PSC8	250	80	80	0.6					

* Insert Not Included

PSC-PCLNR/L



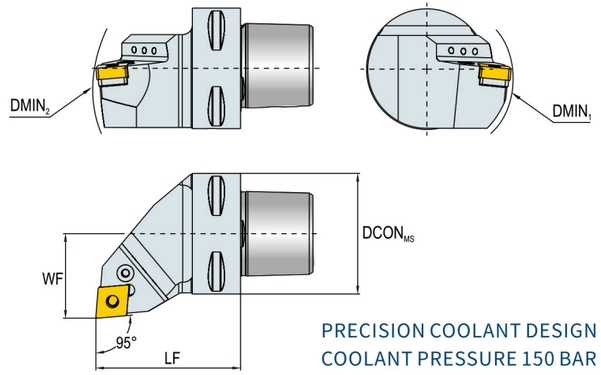

PRECISION COOLANT DESIGN
COOLANT PRESSURE 150 BAR

Order No.		Shank	Size(mm)					Insert	Shim	Lever	Screw	Tubular rivet	Hex wrench
Right hand	Left hand		DMIN1	DMIN2	DCONMS	LF	WF						
295-07-101	295-07-102	PSC4	110	140	40	50	27	CN..1204..	PC1203	PL-4	PS0820B	SP06	S3
295-07-103	295-07-104	PSC5	110	165	50	60	35						
295-07-105	295-07-106	PSC6	110	195	63	65	45						
295-07-107	295-07-108	PSC8	110	250	80	80	55						
295-07-109	295-07-110	PSC5	125	165	50	60	35	CN..1606..	PC1604	PL-5	PS0820A	SP08	S3
295-07-111	295-07-112	PSC6	110	195	63	65	45						
295-07-113	295-07-114	PSC8	125	250	80	80	55						
295-07-115	295-07-116	PSC6	110	195	63	65	45	CC..1906..	PC1904	PL-6	PS1027	SP10	S4
295-07-117	295-07-118	PSC8	150	250	80	80	55						
295-07-119	295-07-120	PSC10	220	315	100	110	68						

* Insert Not Included

PSC-PCRNR/L



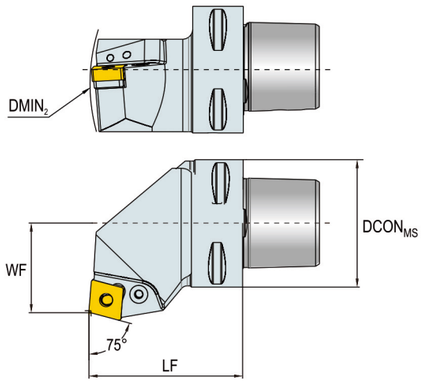

PRECISION COOLANT DESIGN
COOLANT PRESSURE 150 BAR

Order No.		Shank	Size(mm)				Insert	Shim	Lever	Screw	Tubular rivet	Hex wrench
Right hand	Left hand		DMIN2	DCONMS	LF	WF						
295-07-121	295-07-122	PSC6	190	63	65	35	CN..1606..	PC1604	PL-5	PS0820A	SP08	S3
295-07-123	295-07-124	PSC6	190	63	65	35	CN..1906..	PC1904	PL-6	PS1027	SP10	S4

* Insert Not Included

PSC-PDJNR/L



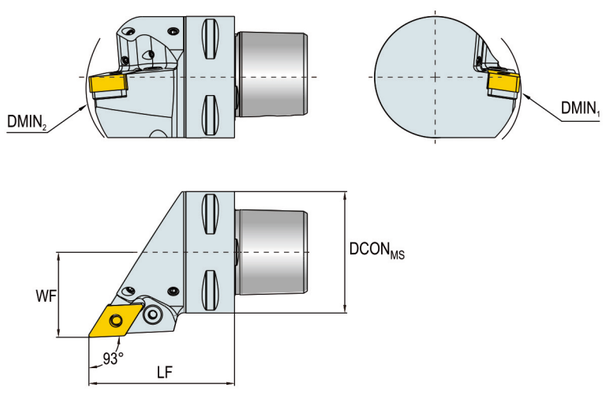

PRECISION COOLANT DESIGN
COOLANT PRESSURE 150 BAR

Order No.		Shank	Size(mm)					Insert	Shim	Lever	Screw	Tubular rivet	Hex wrench
Right hand	Left hand		DMIN1	DMIN2	DCONMS	LF	WF						
295-08-101	295-08-102	PSC4	90	145	40	50	27	DN..1104..	PD1104	PL-3	PS0617	SP05	S2.5
295-08-103	295-08-104	PSC5	110	165	50	60	35						
295-08-105	295-08-106	PSC4	65	145	40	55	27	DN..1506..	PD1503	PL-5M	PS0821	SP06	S3
295-08-107	295-08-108	PSC5	65	165	50	60	35						
295-08-109	295-08-110	PSC6	95	195	63	65	45						
295-08-111	295-08-112	PSC8	130	250	80	80	55						
295-08-113	295-08-114	PSC10	180	280	100	110	68						

* Insert Not Included

PSC-PSKNR/L



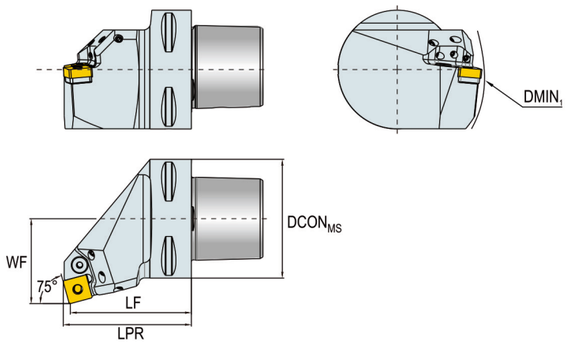

PRECISION COOLANT DESIGN
COOLANT PRESSURE 150 BAR

Order No.		Shank	Size(mm)						Insert	Shim	Lever	Screw	Tubular rivet	Hex wrench
Right hand	Left hand		DMIN2	DCONMS	LPR	LF	WF							
295-09-101	295-09-102	PSC6	125	63	68.8	65	45		SN..1506..	PS1504	PL-5	PS0820A	SP08	S3
295-09-103	295-09-104	PSC6	125	63	69.6	65	45		SN..1906..	PS1904	PL-6	PS1027	SP10	S4

* Insert Not Included

PSC-PSSNR/L



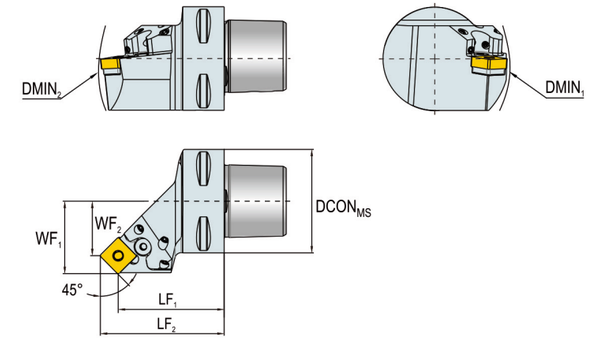

PRECISION COOLANT DESIGN
COOLANT PRESSURE 150 BAR

Order No.		Shank	Size(mm)							Insert	Shim	Lever	Screw	Tubular rivet	Hex wrench
Right hand	Left hand		DMIN1	DMIN2	DCONMS	LF1	LF2	WF1	WF2						
295-09-105	295-09-106	PSC4	90	145	40	42	50.3	27	18.7	SN..1204..	PS1203	PL-4	PS0820B	SP06	S3
295-09-107	295-09-108	PSC5	110	165	50	52	60.3	35	26.7						
295-09-109	295-09-110	PSC6	110	200	63	56	64.3	45	36.7						
295-09-111	295-09-112	PSC8	200	260	80	80	88.3	55	46.7						
295-09-113	295-09-114	PSC6	110	200	63	54	64.2	45	34.8	SN..1506..	PS1504	PL-5	PS0820A	SP08	S3
295-09-115	295-09-116	PSC6	110	180	63	52	64.5	45	32.5	SN..1906..	PS1904	PL-6	PS1027	SP10	S4
295-09-117	295-09-118	PSC8	200	260	80	80	92.5	55	42.5						
295-09-119	295-09-120	PSC10	260	315	100	92	104.5	68	55.5						

* Insert Not Included

PSC-PCLNR/L



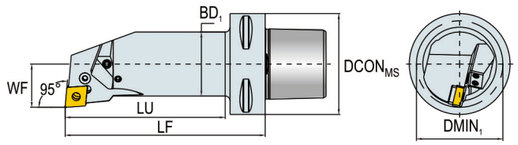

PRECISION COOLANT DESIGN
COOLANT PRESSURE 150 BAR

Order No.		Shank	Size(mm)						Insert	Shim	Lever	Screw	Tubular rivet	Hex wrench
Right hand	Left hand		DMIN1	DCONMS	BD1	LU	LF	WF						
205-07-101	205-07-102	PSC3	40	32	32	48	64	22	CN..1204..	PC1203	PL-4	PS0820B	SP06	S3
205-07-103	205-07-104	PSC3	40	32	32	80	96	22						
205-07-105	205-07-106	PSC4	40	40	32	86.6	110	22						
205-07-107	205-07-108	PSC4	50	40	40	59	80	27						
205-07-109	205-07-110	PSC4	50	40	40	99	120	27						
205-07-111	205-07-112	PSC5	40	50	32	82.2	110	22						
205-07-113	205-07-114	PSC5	50	50	40	115.6	140	27						
205-07-115	205-07-116	PSC5	63	50	50	79	100	35						
205-07-117	205-07-118	PSC6	40	63	32	78.5	110	22						
205-07-119	205-07-120	PSC5	63	50	50	129	150	35	CN..1606..	PC1604	PL-5	PS0825	SP08	S3
205-07-121	205-07-122	PSC6	50	63	40	109.5	140	27						
205-07-123	205-07-124	PSC6	63	63	50	146.7	175	35						

* Insert Not Included

PSC-PSKNR/L



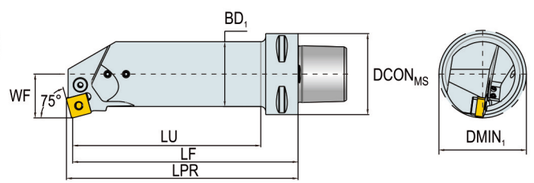

PRECISION COOLANT DESIGN
COOLANT PRESSURE 150 BAR

Order No.		Shank	Size(mm)							Insert	Shim	Lever	Screw	Tubular rivet	Torx wrench
Right hand	Left hand		DMIN1	DCONMS	BD1	LU	LPR	LF	WF						
205-09-101	205-09-102	PSC4	40	40	32	86.6	113.1	110	22	SN..1204..	PS1203	PL-4	PS0820B	SP06	S3
205-09-103	205-09-104	PSC5	40	50	32	82.2	113.1	110	22						
205-09-105	205-09-106	PSC5	50	50	40	115.6	143.1	140	27						
205-09-107	205-09-108	PSC6	40	63	32	78.5	113.1	110	22						
205-09-109	205-09-110	PSC6	63	63	50	146.7	178.8	175	35	SN..1506..	PS1504	PL-5	PS0820A	SP08	S3

* Insert Not Included

PSC-PDUNR/L



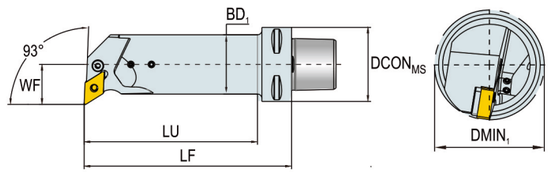

PRECISION COOLANT DESIGN
COOLANT PRESSURE 150 BAR

Order No.		Shank	Size(mm)						Insert	Shim	Lever	Screw	Tubular rivet	Hex wrench
Right hand	Left hand		DMIN1	DCONMS	BD1	LU	LF	WF						
205-08-101	205-08-102	PSC4	40	40	32	86.6	110	22	DN..1104..	PD1103	PL-3	PS0617	SP05	S2.5
205-08-103	205-08-104	PSC5	40	50	32	82.2	110	22						
205-08-105	205-08-106	PSC4	50	40	40	59	80	27	DN..1506..	PD1503	PL-5M	PS0821	SP06	S3
205-08-107	205-08-108	PSC4	50	40	40	99	120	27						
205-08-109	205-08-110	PSC5	50	50	40	115.6	140	27						
205-08-111	205-08-112	PSC5	63	50	50	79	100	35						
205-08-113	205-08-114	PSC5	63	50	50	129	150	35						
205-08-115	205-08-116	PSC6	40	63	32	78.5	110	22						
205-08-117	205-08-118	PSC6	50	63	40	109.5	140	27						
205-08-119	205-08-120	PSC6	63	63	50	146.7	175	35						

* Insert Not Included

EXTERNAL THREADING



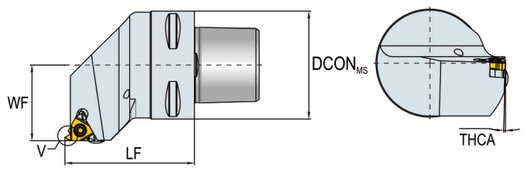

CONVENTIONAL COOLANT
COOLANT PRESSURE 40 BAR

Order No.		Shank	Size(mm)				Insert	Shim	Shim Screw	Screw	Torx wrench	Hex wrench
Right hand	Left hand		DCONMS	LF	WF	THCA						
295-17-201	295-17-202	PSC3	32	40	22	1.5°	16ER.. 16EL..	LT16/0.5 LT16/1.75	SS04008	C035A12IP	T15IP	S2.5
295-17-203	295-17-204	PSC4	40	50	27	1.5°						
295-17-205	295-17-206	PSC5	50	60	35	1.5°						
295-17-207	295-17-208	PSC6	63	65	45	1.5°						
295-17-209	295-17-210	PSC8	80	80	55	1.5°						
295-17-211	295-17-212	PSC4	40	50	27	1.5°	22ER.. 22EL..	LT22	SS04008	L60 M4x15	T15	S2.5
295-17-213	295-17-214	PSC5	50	60	35	1.5°						
295-17-215	295-17-216	PSC6	63	65	45	1.5°						
295-17-217	295-17-218	PSC8	80	80	55	1.5°						

* Insert Not Included

INTERNAL THREADING



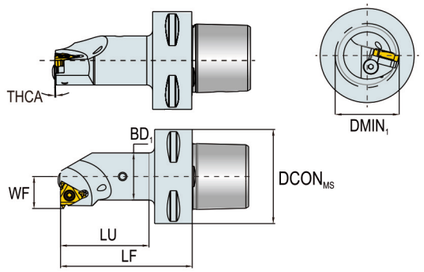

CONVENTIONAL COOLANT
COOLANT PRESSURE 40 BAR

Order No.		Shank	Size(mm)							Insert	Shim	Shim Screw	Screw	Torx wrench	Hex wrench
Right hand	Left hand		$DMIN_1$	$DCON_{MS}$	BD_1	LU	LF	WF	THCA						
205-17-201	205-17-202	PSC3	32	32	20	44	60	14	1.5°	16NL.. 16NR..	—	—	C035A08IP	T15IP	—
205-17-203	205-17-204	PSC4	40	40	20	38	60	14	1.5°						
205-17-205	205-17-206	PSC4	40	40	25	48	70	17	1.5°		LT16/0.5 LT16/1.75	SS04008	C035A12IP		S2.5
205-17-207	205-17-208	PSC4	40	40	32	69	90	22	1.5°						
205-17-209	205-17-210	PSC5	50	50	20	36	60	14	1.5°		—	—	C035A08IP		—
205-17-211	205-17-212	PSC5	50	50	25	47	70	17	1.5°		LT16/0.5 LT16/1.75	SS04008	C035A12IP		S2.5
205-17-213	205-17-214	PSC5	50	50	32	68	90	22	1.5°						
205-17-215	205-17-216	PSC5	50	50	40	84	105	27	1.5°						
205-17-217	205-17-218	PSC6	63	63	20	42	70	14	1.5°		—	—	C035A08IP		—
205-17-219	205-17-220	PSC6	63	63	25	48	75	17	1.5°		LT16/0.5 LT16/1.75	SS04008	C035A12IP		S2.5
205-17-221	205-17-222	PSC6	63	63	32	64	90	22	1.5°						
205-17-223	205-17-224	PSC6	63	63	40	80	105	27	1.5°						
205-17-225	205-17-226	PSC4	40	40	25	48	70	19	1.5°	22NL.. 22NR..	LT22	SS04008	L60 M4x15	T15	S2.5
205-17-227	205-17-228	PSC4	40	40	32	69	90	22	1.5°						
205-17-229	205-17-230	PSC4	40	40	39.5	60	80	27	1.5°						
205-17-231	205-17-232	PSC5	50	50	40	84	105	26.9	1.5°						
205-17-223	205-17-224	PSC5	50	50	25	47	70	19	1.5°						
205-17-225	205-17-226	PSC5	50	50	32	68	90	22	1.5°						
205-17-227	205-17-228	PSC6	63	63	40	80	105	26.9	1.5°						
205-17-229	205-17-230	PSC6	63	63	25	48	75	19	1.5°						
205-17-231	205-17-232	PSC6	63	63	32	64	90	22	1.5°						

* Insert Not Included

PARTING AND GROOVING



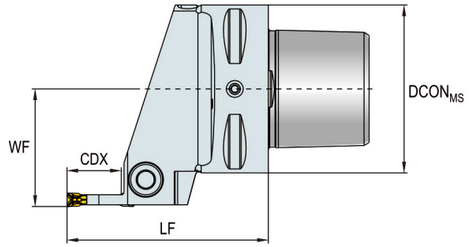

CONVENTIONAL COOLANT
COOLANT PRESSURE 40 BAR

Order No.		Shank	Size(mm)				Insert	Screw	Torx wrench
Right hand	Left hand		$DCON_{MS}$	LF	WF	CDX			
295-18-201	295-18-202	PSC3	32	55	22	16	QE3.0	MS05016	S4
295-18-203	295-18-204	PSC4	40	60	27	16			
295-18-205	295-18-206	PSC5	50	60	35	16			
295-18-207	295-18-208	PSC6	63	65	45	16			
295-18-209	295-18-210	PSC3	32	55	22	16	QE4.0	MS05016	S4
295-18-211	295-18-212	PSC4	40	60	27	16			
295-18-213	295-18-214	PSC5	50	60	35	16			
295-18-215	295-18-216	PSC6	63	65	45	16			
295-18-217	295-18-218	PSC4	40	60	27	20	QE5.0	MS06020	S5
295-18-219	295-18-220	PSC5	50	60	35	20			
295-18-221	295-18-222	PSC6	63	65	45	20			
295-18-223	295-18-224	PSC8	80	80	45	20			

* Insert Not Included

PARTING AND GROOVING



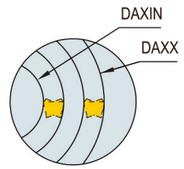

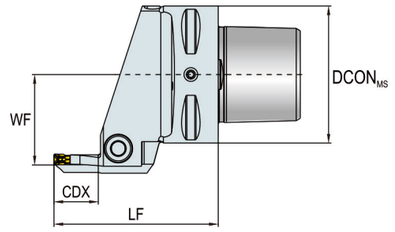

CONVENTIONAL COOLANT
COOLANT PRESSURE 40 BAR

Order No.		Shank	Size(mm)						Insert	Screw	Torx wrench
Right hand	Left hand		DCONMS	LF	WF	DAXIN	DAXX	CDX			
295-18-225	295-18-226	PSC4	40	60	27	75	100	16	QE3.0	MS05016	S4
295-18-227	295-18-228	PSC5	50	60	35	75	100	16			
295-18-229	295-18-230	PSC4	40	60	27	48	60	16	QE4.0	MS05016	S4
295-18-231	295-18-232	PSC4	40	60	27	60	75	16			
295-18-233	295-18-234	PSC4	40	60	27	75	100	16			
295-18-235	295-18-236	PSC4	40	60	27	100	140	16			
295-18-237	295-18-238	PSC4	40	60	27	140	240	16			
295-18-239	295-18-240	PSC4	40	60	27	240	480	16			
295-18-241	295-18-242	PSC5	50	60	33	48	60	16			
295-18-243	295-18-244	PSC5	50	60	33	60	75	16			
295-18-245	295-18-246	PSC5	50	60	33	75	100	16			
295-18-247	295-18-248	PSC5	50	60	33	100	140	16			
295-18-249	295-18-250	PSC5	50	60	33	140	240	16			
295-18-251	295-18-252	PSC5	50	65	39	240	480	16			
295-18-253	295-18-254	PSC6	63	65	39	48	60	16			
295-18-255	295-18-256	PSC6	63	65	39	60	75	16			
295-18-257	295-18-258	PSC6	63	65	39	75	100	16			
295-18-259	295-18-260	PSC6	63	65	39	100	140	16			
295-18-261	295-18-262	PSC6	63	65	39	140	240	16			
295-18-263	295-18-264	PSC6	63	65	39	240	480	16			
295-18-265	295-18-266	PSC4	40	65	27	54	70	16	QE5.0	MS06020	S5
295-18-267	295-18-268	PSC4	40	65	27	70	95	16			
295-18-269	295-18-270	PSC4	40	65	27	95	130	16			
295-18-271	295-18-272	PSC4	40	65	27	130	180	16			
295-18-273	295-18-274	PSC4	40	65	27	140	240	16			
295-18-275	295-18-276	PSC4	40	65	27	240	1000	16			
295-18-277	295-18-278	PSC5	50	65	33	54	70	16			
295-18-279	295-18-280	PSC5	50	65	33	70	95	16			
295-18-281	295-18-282	PSC5	50	65	33	95	130	16			
295-18-283	295-18-284	PSC5	50	65	33	130	180	16			
295-18-285	295-18-286	PSC5	50	65	33	140	240	16			
295-18-287	295-18-288	PSC5	50	65	33	240	1000	16			
295-18-289	295-18-290	PSC6	63	70	39	54	70	16			
295-18-291	295-18-292	PSC6	63	70	39	70	95	16			
295-18-293	295-18-294	PSC6	63	70	39	95	130	16			
295-18-295	295-18-296	PSC6	63	70	39	130	180	16			
295-18-297	295-18-298	PSC6	63	70	39	140	240	16			
295-18-299	295-18-300	PSC6	63	70	39	240	1000	16			

* Insert Not Included



B

TOOL HOLDING

PSC TO RECTANGULAR SHANK ADAPTOR



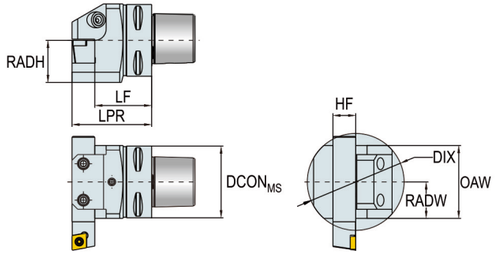

CONVENTIONAL COOLANT
COOLANT PRESSURE 40 BAR

Order No.	Shank	Size(mm)										
		CZCWS	DCONMS	LPR	LF	WF	HF	OAW	OAH	RADH	RADW	DIX
742-01-001	PSC5	20x20	50	65	45	32	20	64	69	37	32	85
742-01-002	PSC6	20x20	63	70	50	32	20	64	69	37	32	85
742-01-003	PSC6	25x25	63	80	55	38	25	76	78	46	38	100
742-01-004	PSC8	25x25	80	75	50	38	25	80	86	46	38	103

PSC TO RECTANGULAR SHANK ADAPTOR

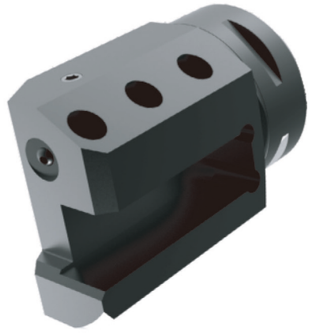

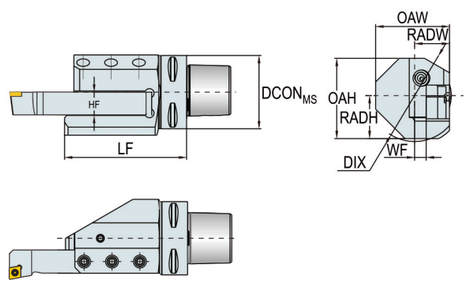

CONVENTIONAL COOLANT
COOLANT PRESSURE 40 BAR

Order No.		Shank	Size(mm)									
Right hand	Left hand		CZCWS	DCONMS	LF	WF	HF	OAW	OAH	RADH	RADW	DIX
742-02-001	742-02-002	PSC5	20x20	50	95	10	20	55.5	69	37	30	85
742-02-003	742-02-004	PSC6	20x20	63	105	10	20	63.5	69	37	30	85
742-02-005	742-02-006	PSC6	25x25	63	122	13	25	70	78	46	38	100
742-02-007	742-02-008	PSC8	25x25	80	122	15	25	80	86	46	40	103

*RIGHT-HAND VERSION SHOWN

PSC TO RECTANGULAR SHANK ADAPTOR

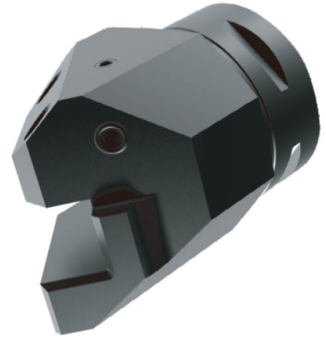

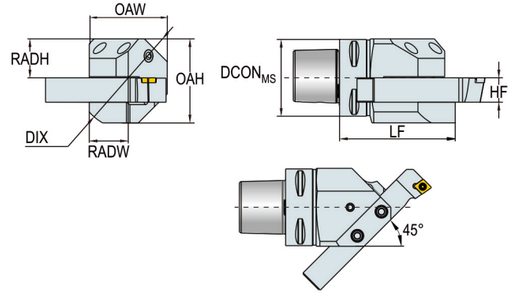

CONVENTIONAL COOLANT
COOLANT PRESSURE 40 BAR

Order No.		Shank	Size(mm)									
Right hand	Left hand		CZCWS	DCONMS	LF	HF	OAW	OAH	RADH	RADW	DIX	
742-03-001	742-03-002	PSC5	20x20	50	85	20	64	69	37	32	85	
742-03-003	742-03-004	PSC6	20x20	63	95	20	64	69	37	32	85	
742-03-005	742-03-006	PSC6	25x25	63	114	25	72	78	46	36	100	

*RIGHT-HAND VERSION SHOWN

PSC TO RECTANGULAR SHANK ADAPTOR

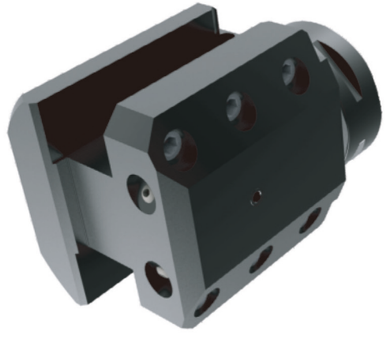

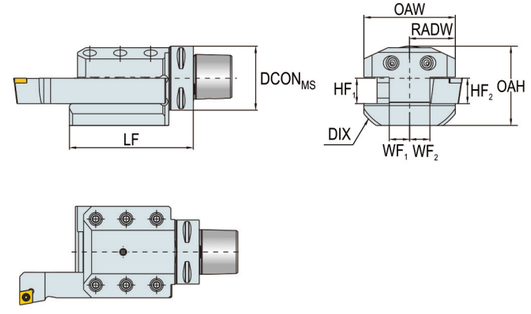

CONVENTIONAL COOLANT
COOLANT PRESSURE 40 BAR

Order No.	Shank	Size(mm)										
		CZCWS	DCONMS	LF	WF1	WF2	HF 1	HF 2	OAW	OAH	RADW	DIX
742-04-001	PSC6	25x25	63	122	20	20	25	25	90	78	45	114
742-04-002	PSC8	25x25	80	122	30	30	25	25	110	78	55	128

*RIGHT-HAND VERSION SHOWN

PSC TO RECTANGULAR SHANK ADAPTOR

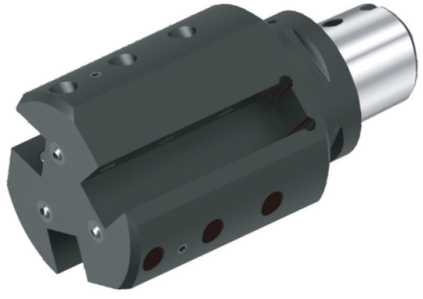

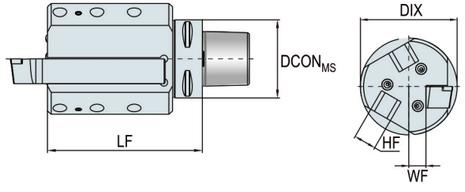

CONVENTIONAL COOLANT
COOLANT PRESSURE 40 BAR

Order No.		Shank	Size(mm)								
Right hand	Left hand		CZCWS	DCONMS	LF	WF	HF	DIX			
742-05-001	742-05-002	PSC5	20x20	50	123	16	20	90			
742-05-003	742-05-004	PSC6	20x20	63	125	16	20	90			

*RIGHT-HAND VERSION SHOWN

RECTANGULAR SHANK TO PSC CLAMPING UNIT



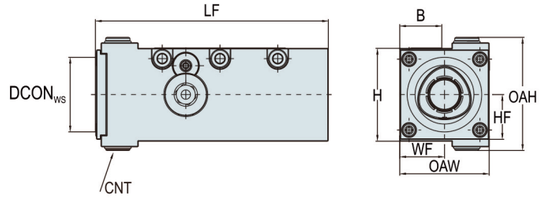

Order No.		Shank	Size(mm)								
Right hand	Left hand		DCONWS	B	H	LF	WF	HF	OAW	OAH	CNT
743-04-001	743-04-002	PSC3	32	20	40	95	19	20	38	62	G 1/8-28
743-04-003	743-04-004	PSC4	40	25	50	125	24	25	48	58	G 1/8-28
743-04-005	743-04-006	PSC5	50	32	64	146	32	32	64	72	G 1/8-28

*RIGHT-HAND VERSION SHOWN

HYDRAULIC CLAMPING UNIT



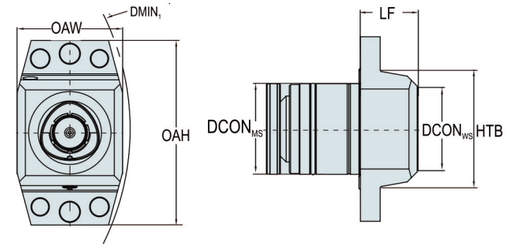

Order No.	Shank	Size(mm)						
		DCONMS	DCONWS	LF	HTB	OAW	OAH	DMIN 1
743-05-001	PSC5	55	50	35	70	64	112	300
743-05-002	PSC6	70	63	40	90	84	143	400
743-05-003	PSC8	90	80	50	110	100	180	500

RECTANGULAR SHANK TO PSC CLAMPING UNIT

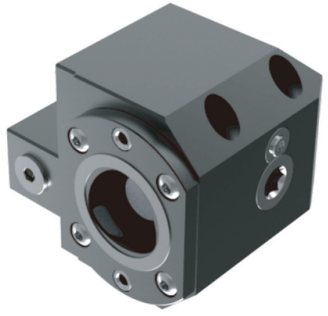

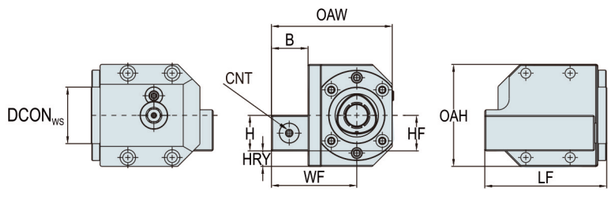

CONVENTIONAL COOLANT
COOLANT PRESSURE 40 BAR

Order No.		Shank	Size(mm)									
Right hand	Left hand		DCONWS	B	H	LF	WF	HF	OAW	OAH	HRY	CNT
743-04-007	743-04-008	PSC4	40	26	25	110	59	25	83	77	13	G 1/4-19
743-04-009	743-04-010	PSC5	50	33	32	110	77	32	109	92	14	G 1/4-19
743-04-011	743-04-012	PSC6	63	40	40	140	93	40	135	105	13	G 1/4-19

*RIGHT-HAND VERSION SHOWN

PSC TO ISO 9766 ADAPTOR



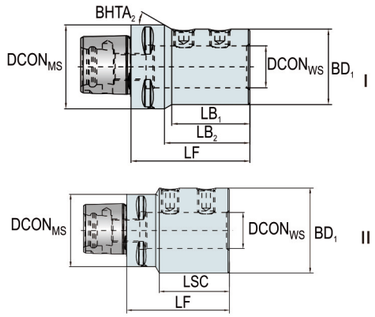

CONVENTIONAL COOLANT
COOLANT PRESSURE 40 BAR

Order No.	Shank	Size(mm)								
		$DCON_{MS}$	$DCON_{WS}$	LSC	LF	LB_1	LB_2	BD_1	$BHTA_2$	DSGN
742-06-001	PSC3	32	20	51	60	60	—	40	—	II
742-06-002	PSC3	32	25	57	80	80	—	45	—	II
742-06-003	PSC4	40	20	51	60	60	—	40	—	II
742-06-004	PSC4	40	25	57	77	77	—	45	—	II
742-06-005	PSC4	40	32	61	88	88	—	52	—	II
742-06-006	PSC5	50	20	51	60	37.7	40	40	65°	I
742-06-007	PSC5	50	25	57	71	46.7	51	45	30°	I
742-06-008	PSC5	50	32	61	75	75	—	52	—	II
742-06-009	PSC5	50	40	71	100	100	—	65	—	II
742-06-010	PSC6	63	20	51	70	43.8	48	40	70°	I
742-06-011	PSC6	63	25	57	72	45.8	50	45	65°	I
742-06-012	PSC6	63	32	61	75	49.8	53	52	60°	I
742-06-013	PSC6	63	40	71	85	85	—	65	—	II



PSC

TOOLING SYSTEMS

PSC TO HYDRAULIC EXPANSIONS CHUCK



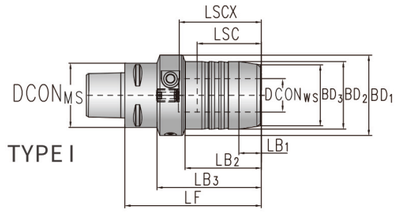

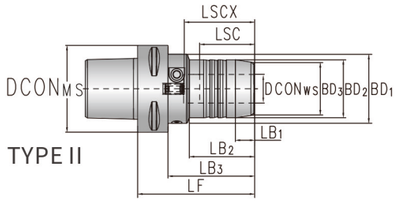

INTERNAL COOLANT DESIGN
COOLANT PRESSURE ⩽ 80BAR

Order No.	Shank	Size(mm)											Screw	Wrench	DGSN
		$DCON_{MS}$	$DCON_{WS}$	LF	LB_1	LB_2	LB_3	BD_3	BD_2	BD_1	LSC	LSCX			
182-01-001	PSC4	40	6	65	14	24	45	22	26	50	26	37	HCSO05014C	TS5	TYPY Ⅰ
182-01-002	PSC4	40	8	65	14	25	45	24	28	50	26	37	HCSO06014C	TS5	TYPY Ⅰ
182-01-003	PSC4	40	10	75	14	35	55	26	30	50	30	41	HCSO08014C	TS5	TYPY Ⅰ
182-01-004	PSC4	40	12	85	14	45	65	28	32	50	36	46	HCSO08014C	TS5	TYPY Ⅰ
182-01-005	PSC4	40	16	85	14	48	65	34	38	50	40	49	HCSO08014C	TS5	TYPY Ⅰ
182-01-006	PSC4	40	20	85	14	48	65	38	42	50	40	51	HCSO08014C	TS5	TYPY Ⅰ
182-01-007	PSC5	50	6	60	14	24	—	22	26	50	26	37	HCSO05014C	TS5	TYPY Ⅱ
182-01-008	PSC5	50	8	60	14	25	—	24	28	50	26	37	HCSO06014C	TS5	TYPY Ⅱ
182-01-009	PSC5	50	10	70	14	35	—	26	30	50	30	41	HCSO08014C	TS5	TYPY Ⅱ
182-01-010	PSC5	50	12	80	14	45	—	28	32	50	36	46	HCSO08014C	TS5	TYPY Ⅱ
182-01-011	PSC5	50	16	80	14	48	—	34	38	50	40	49	HCSO08014C	TS5	TYPY Ⅱ
182-01-012	PSC5	50	20	80	14	48	—	38	42	50	40	51	HCSO08014C	TS5	TYPY Ⅱ
182-01-013	PSC5	50	25	100	14	59	80	53	57	63	48.5	57	HCSO12014C	TS5	TYPY Ⅰ
182-01-014	PSC6	63	6	70	14	29	48	22	26	50	26	37	HCSO05014C	TS5	TYPY Ⅱ
182-01-015	PSC6	63	8	70	14	30	48	24	28	50	26	37	HCSO06014C	TS5	TYPY Ⅱ
182-01-016	PSC6	63	10	75	14	35	53	26	30	50	30	41	HCSO08014C	TS5	TYPY Ⅱ
182-01-017	PSC6	63	12	85	14	45	63	28	32	50	36	46	HCSO08014C	TS5	TYPY Ⅱ
182-01-018	PSC6	63	16	85	14	48	63	34	38	50	40	49	HCSO08014C	TS5	TYPY Ⅱ
182-01-019	PSC6	63	20	85	14	48	63	38	42	50	40	51	HCSO08014C	TS5	TYPY Ⅱ
182-01-020	PSC6	63	25	100	14	59	—	53	57	63	48.5	57	HCSO12014C	TS5	TYPY Ⅱ
182-01-021	PSC6	63	32	105	14	63	83	60	64	75	53	61	HCSO12014C	TS5	TYPY Ⅰ
182-01-022	PSC8	80	12	95	14	45	63	28	32	50	36	46	HCSO08014C	TS5	TYPY Ⅱ
182-01-023	PSC8	80	20	95	14	48	63	38	42	50	40	51	HCSO08014C	TS5	TYPY Ⅱ
182-01-024	PSC8	80	32	115	14	63	82	60	64	75	53	61	HCSO12014C	TS5	TYPY Ⅱ

* Other sizes on enquiry

PSC TO SHRINK FIT CHUCK



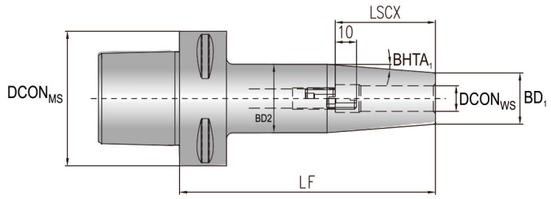

INTERNAL COOLANT DESIGN
COOLANT PRESSURE ⩽ 80BAR

Order No.	Shank	Size(mm)							Screw
		$DCON_{MS}$	$DCON_{WS}$	LF	LSCX	BD_1	BD_2	$BHTA_1$	
182-02-001	PSC4	40	6	75	36	21	27	4.5°	SO05014C
182-02-002	PSC4	40	8	75	36	21	27	4.5°	SO06014C
182-02-003	PSC4	40	10	75	42	24	32	4.5°	SO08014C
182-02-004	PSC4	40	12	75	47	24	32	4.5°	SO08014C
182-02-005	PSC4	40	14	80	47	27	34	4.5°	SO08014C
182-02-006	PSC4	40	16	80	50	27	34	4.5°	SO12014C
182-02-007	PSC5	50	6	75	36	21	27	4.5°	SO05014C
182-02-008	PSC5	50	8	75	36	21	27	4.5°	SO06014C
182-02-009	PSC5	50	10	75	42	24	32	4.5°	SO08014C
182-02-010	PSC5	50	12	75	47	24	32	4.5°	SO08014C
182-02-011	PSC5	50	14	80	47	27	34	4.5°	SO08014C
182-02-012	PSC5	50	16	80	50	27	34	4.5°	SO12014C
182-02-013	PSC5	50	18	80	50	33	42	4.5°	SO12014C
182-02-014	PSC5	50	20	85	52	33	42	4.5°	SO16014C
182-02-015	PSC6	63	6	80	36	21	27	4.5°	SO05014C
182-02-016	PSC6	63	8	80	36	21	27	4.5°	SO06014C
182-02-017	PSC6	63	10	80	42	24	32	4.5°	SO08014C
182-02-018	PSC6	63	12	80	47	24	32	4.5°	SO08014C
182-02-019	PSC6	63	14	85	47	27	34	4.5°	SO08014C
182-02-020	PSC6	63	16	85	50	27	34	4.5°	SO12014C
182-02-021	PSC6	63	18	85	50	33	42	4.5°	SO12014C
182-02-022	PSC6	63	20	85	52	33	42	4.5°	SO16016C
182-02-023	PSC6	63	25	90	58	44	53	4.5°	SO16016C
182-02-024	PSC6	63	32	95	58	44	53	4.5°	SO16016C
182-02-025	PSC8	80	10	90	42	24	32	4.5°	SO08014C
182-02-026	PSC8	80	12	90	47	24	32	4.5°	SO08014C
182-02-027	PSC8	80	16	95	47	27	34	4.5°	SO12014C
182-02-028	PSC8	80	20	95	52	33	42	4.5°	SO16016C
182-02-029	PSC8	80	25	100	58	44	53	4.5°	SO16016C
182-02-030	PSC10	100	12	95	47	24	32	4.5°	SO08014C
182-02-031	PSC10	100	16	100	50	27	34	4.5°	SO12014C
182-02-032	PSC10	100	20	100	52	33	42	4.5°	SO16016C
182-02-033	PSC10	100	25	110	58	44	53	4.5°	SO16016C

* Other sizes on enquiry

PSC TO SIDE LOCK HOLDER



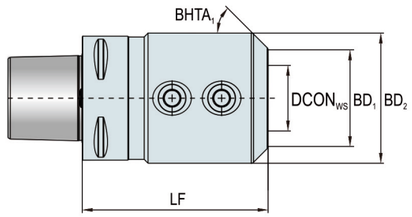

INTERNAL COOLANT DESIGN
COOLANT PRESSURE ⩽ 80BAR

Order No.	Shank	Size(mm)					Screw
		DCONWS	LF	BD1	BD2	BHTA1	
182-05-001	PSC4	16	55	38	48	45°	SXP16
182-05-002	PSC5	16	60	38	48	45°	SXP16
182-05-003	PSC5	20	60	42	52	45°	SXP20
182-05-004	PSC5	25	80	49	65	45°	SXP25
182-05-005	PSC6	16	65	38	48	45°	SXP16
182-05-006	PSC6	20	65	42	52	45°	SXP20
182-05-007	PSC6	25	80	49	65	45°	SXP25
182-05-008	PSC6	32	90	56	72	45°	SXP32
182-05-009	PSC6	40	100	74	90	45°	SXP40
182-05-010	PSC8	16	70	38	48	45°	SXP16
182-05-011	PSC8	18	70	40	50	45°	SXP18
182-05-012	PSC8	20	70	42	52	45°	SXP20
182-05-013	PSC8	25	80	49	65	45°	SXP25
182-05-014	PSC8	32	80	56	72	45°	SXP32
182-05-015	PSC8	40	110	74	90	45°	SXP40
182-05-016	PSC8	50	120	84	100	45°	SXP50

* Other sizes on enquiry

PSC TO POWER MILLING CHUCK



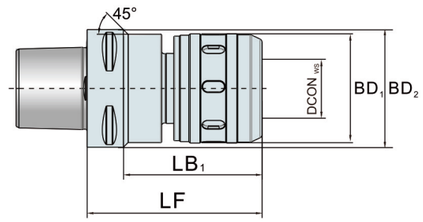

Order No.	Shank	Size(mm)					Collets
		DCONWS	LF	BD1	BD2	LB1	
182-03-001	PSC4	20	85	52	40	—	C20
182-03-002	PSC5	20	90	52	50	—	C20
182-03-003	PSC5	25	95	60	50	—	C25
182-03-004	PSC6	20	90	52	63	65	C20
182-03-005	PSC6	25	95	60	63	71	C25
182-03-006	PSC6	32	110	68	63	—	C32
182-03-007	PSC8	25	95	60	80	63	C25
182-03-008	PSC8	32	110	68	80	76	C32
182-03-009	PSC8	42	110	86	80	—	C42
182-03-010	PSC10	32	120	68	100	80	C32
182-03-011	PSC10	42	120	86	100	80	C42

* Other sizes on enquiry

PSC TO ER COLLET CHUCK



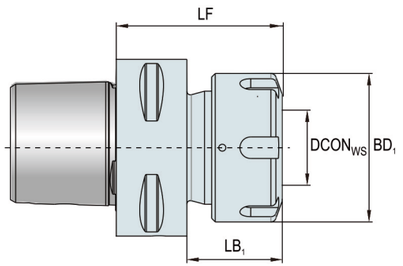

INTERNAL COOLANT DESIGN
COOLANT PRESSURE ⩽ 80BAR

Order No.	Shank	Size(mm)				Nuts	Screw	Collets
		DCONWS	LF	LB1	BD1			
182-04-001	PSC3	17	45	29	28	CN16HS	SER16C	ER16
182-04-002	PSC3	21	45	30	34	CN20HS	SER20C	ER20
182-04-003	PSC4	21	52	30.8	34	CN20HS	SER20C	ER20
182-04-004	PSC4	26	52	32	42	CN25B	SER25C	ER25
182-04-005	PSC4	33	54	34	50	CN32B	SER32C	ER32
182-04-006	PSC5	21	55	31.1	34	CN20HS	SER20C	ER20
182-04-007	PSC5	26	55	33	42	CN25B	SER25C	ER25
182-04-008	PSC5	33	57	35	50	CN32B	SER32C	ER32
182-04-009	PSC5	33	100	78	50	CN32B	SER32C	ER32
182-04-010	PSC6	26	60	32.9	50	CN25B	SER25C	ER25
182-04-011	PSC6	26	100	75	42	CN25B	SER25C	ER25
182-04-012	PSC6	33	60	35.3	50	CN32B	SER32C	ER32
182-04-013	PSC6	33	100	75	50	CN32B	SER32C	ER32
182-04-014	PSC6	41	65	40	63	CN40B	SER40C	ER40
182-04-015	PSC6	41	130	105	63	CN40B	SER40C	ER40
182-04-016	PSC8	21	65	29.9	35	CN20HS	SER20C	ER20
182-04-017	PSC8	26	70	32.4	42	CN25B	SER25C	ER25
182-04-018	PSC8	33	70	35	50	CN32B	SER32C	ER32
182-04-019	PSC8	41	70	38	63	CN40B	SER40C	ER40

* Other sizes on enquiry

PSC TO ER COLLET CHUCK



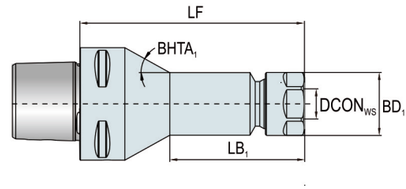

INTERNAL COOLANT DESIGN
COOLANT PRESSURE ⩽ 80BAR

Order No.	Shank	Size(mm)					Nuts	Screw	Collets
		DCONWS	LF	LB1	BD1	BHTA1			
182-04-020	PSC4	17	70	44	28	45°	CN16HS	SER16C	ER16
182-04-021	PSC5	17	100	60	28	29°	CN16HS	SER16C	ER16
182-04-022	PSC5	21	100	55	34	16°	CN20HS	SER20C	ER20
182-04-023	PSC5	21	130	55	34	7°	CN20HS	SER20C	ER20
182-04-024	PSC5	26	100	65	42	14°	CN25B	SER25C	ER25
182-04-025	PSC6	17	100	60	28	44°	CN16HS	SER16C	ER16
182-04-026	PSC6	21	60	31	34	65°	CN20HS	SER20C	ER20
182-04-027	PSC6	26	130	65	42	13°	CN25B	SER25C	ER25
182-04-028	PSC6	26	160	65	42	8	CN25B	SER25C	ER25
182-04-029	PSC6	33	130	75	50	11°	CN32B	SER32C	ER32
182-04-030	PSC8	33	160	75	50	15°	CN32B	SER32C	ER32
182-04-031	PSC8	41	160	95	63	13°	CN40B	SER40C	ER40
182-04-032	PSC10	33	160	75	50	27°	CN32B	SER32C	ER32
182-04-033	PSC10	41	160	95	63	32°	CN40B	SER40C	ER40

* Other sizes on enquiry

PSC TO SHELL MILL ADAPTOR



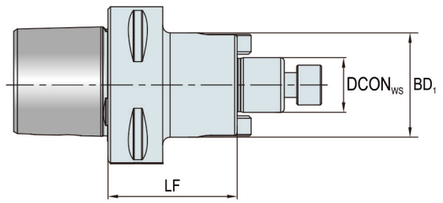

Order No.	Shank	Size(mm)			Screw	Key	Key screw
		DCONWS	LF	BD1			
182-07-012	PSC3	16	30	34	MS08030	JC08017	MS03008
182-07-013	PSC4	16	32	34	MS08030	JC08017	MS03008
182-07-014	PSC4	16	55	34	MS08030	JC08017	MS03008
182-07-015	PSC4	22	25	42	MS10030	JC10021	MS04010
182-07-016	PSC4	22	55	42	MS10030	JC10021	MS04010
182-07-017	PSC5	16	35	34	MS08030	JC08017	MS03008
182-07-018	PSC5	16	70	34	MS08030	JC08017	MS03008
182-07-019	PSC5	22	25	42	MS10030	JC10021	MS04010
182-07-020	PSC5	22	70	42	MS10030	JC10021	MS04010
182-07-021	PSC5	27	25	56	SXM27	JC12023	MS05016
182-07-022	PSC5	32	40	63	SXM32	JC14020	MS06020
182-07-023	PSC6	16	40	34	MS08030	JC08017	MS03008
182-07-024	PSC6	22	25	63	MS10030	JC10021	MS04010
182-07-025	PSC6	22	80	42	MS10030	JC10021	MS04010
182-07-026	PSC6	27	25	63	SXM27	JC12023	MS05016
182-07-027	PSC6	27	80	60	SXM27	JC12023	MS05016
182-07-028	PSC6	32	25	65	SXM32	JC14020	MS06020
182-07-029	PSC6	40	50	89	SXM40	KXM40	MS08020
182-07-030	PSC8	16	50	34	MS08030	JC08017	MS03008
182-07-031	PSC8	22	30	80	MS10030	JC10021	MS04010
182-07-032	PSC8	22	90	42	MS10030	JC10021	MS04010
182-07-033	PSC8	27	30	80	SXM27	JC12023	MS05016
182-07-034	PSC8	27	90	60	SXM27	JC12023	MS05016
182-07-035	PSC8	32	30	80	SXM32	JC14020	MS06020
182-07-036	PSC8	40	60	89	SXM40	KXM40	MS08020
182-07-037	PSC10	27	75	60	SXM27	JC12023	MS05016
182-07-038	PSC10	32	75	78	SXM32	JC14020	MS06020
182-07-039	PSC10	40	40	89	MS12045(4)	KXM40	MS08020

* Other sizes on enquiry

PSC TO FACE MILLING CUTTER HOLDER



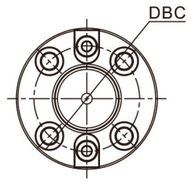

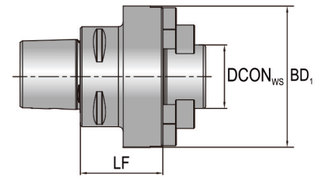

Order No.	Shank	Size(mm)				Screw	Key	Key screw
		DCONWS	DBC	LF	BD1			
182-07-001	PSC6	40	66.7	50	89	MS12045	KXM40	MS08020
182-07-002	PSC8	40	66.7	60	89	MS12045	KXM40	MS08020
182-07-003	PSC10	40	66.7	40	100	MS12045	KXM40	MS08020
182-07-004	PSC8	60	101.6	60	129	MS16045	KXMC60	MS10025
182-07-005	PSC10	60	101.6	75	129	MS16045	KXMC60	MS10025

* Other sizes on enquiry

PSC TO SHELL MILL ADAPTOR



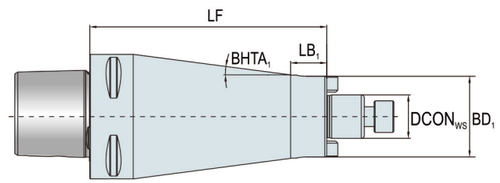

Order No.	Shank	Size(mm)					Screw	Key	Key screw
		DCONWS	LF	LB1	BD1	BHTA1			
182-07-006	PSC4	16	120	22	34	3°	MS08030	JC08017	MS03008
182-07-007	PSC5	22	150	12	42	3°	MS10030	JC10021	MS04010
182-07-008	PSC6	22	120	0	55	3°	MS10030	JC10021	MS04010
182-07-009	PSC6	22	190	0	55	2°	MS10030	JC10021	MS04010
182-07-010	PSC8	27	150	0	65	4°	SXM27	JC12023	MS05016
182-07-011	PSC8	27	240	0	65	2°	SXM27	JC12023	MS05016

* Other sizes on enquiry

SK TO PSC ADAPTOR (BOLT CLAMPING)



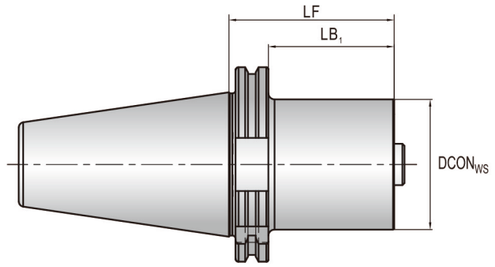

INTERNAL COOLANT FOR ROTATING TOOLS
COOLANT PRESSURE 80 BAR
ADAPTIVE INTERFACE MACHINE DIRECTION: ISO 7388-1

Order No.	Shank	CZCMS	$DCON_{WS}$	LF	LB_1
753-01-001	PSC3	SK40	32	30	10.9
753-01-002	PSC3	SK40	32	60	40.9
753-01-003	PSC4	SK40	40	30	10.9
753-01-004	PSC4	SK40	40	60	40.9
753-01-005	PSC5	SK40	50	40	20.9
753-01-006	PSC5	SK40	50	80	60.9
753-01-007	PSC6	SK40	63	85	65.9
753-01-008	PSC3	SK50	32	30	10.9
753-01-009	PSC3	SK50	32	60	40.9
753-01-010	PSC4	SK50	40	30	10.9
753-01-011	PSC4	SK50	40	60	40.9
753-01-012	PSC5	SK50	50	30	10.9
753-01-013	PSC5	SK50	50	70	50.9
753-01-014	PSC6	SK50	63	30	10.9
753-01-015	PSC6	SK50	63	80	60.9
753-01-016	PSC8	SK50	80	70	50.9
753-01-017	PSC8	SK50	80	120	100.9
753-01-018	PSC10	SK50	100	140	120.9
753-01-019	PSC8	SK60	80	120	100.9
753-01-020	PSC10	SK60	100	50	30.9

* Other sizes on enquiry

SK TO PSC ADAPTOR (BOLT CLAMPING)



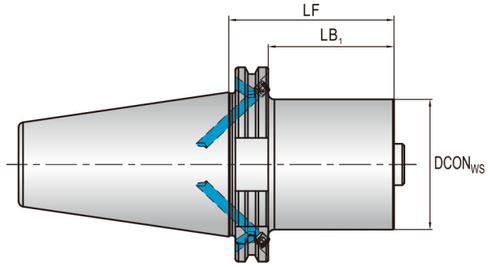

INTERNAL COOLANT FOR ROTATING TOOLS
COOLANT PRESSURE 80 BAR
ADAPTIVE INTERFACE MACHINE DIRECTION: ISO 7388-1

Order No.	Shank	CZCMS	$DCON_{WS}$	LF	LB_1
753-01-001B	PSC3	SK40	32	30	10.9
753-01-002B	PSC3	SK40	32	60	40.9
753-01-003B	PSC4	SK40	40	30	10.9
753-01-004B	PSC4	SK40	40	60	40.9
753-01-005B	PSC5	SK40	50	40	20.9
753-01-006B	PSC5	SK40	50	80	60.9
753-01-007B	PSC6	SK40	63	85	65.9
753-01-008B	PSC3	SK50	32	30	10.9
753-01-009B	PSC3	SK50	32	60	40.9
753-01-010B	PSC4	SK50	40	30	10.9
753-01-011B	PSC4	SK50	40	60	40.9
753-01-012B	PSC5	SK50	50	30	10.9
753-01-013B	PSC5	SK50	50	70	50.9
753-01-014B	PSC6	SK50	63	30	10.9
753-01-015B	PSC6	SK50	63	80	60.9
753-01-016B	PSC8	SK50	80	70	50.9
753-01-017B	PSC8	SK50	80	120	100.9
753-01-018B	PSC10	SK50	100	140	120.9
753-01-019B	PSC8	SK60	80	120	100.9
753-01-020B	PSC10	SK60	100	50	30.9

* Other sizes on enquiry

HSK TO PSC ADAPTOR (BOLT CLAMPING)



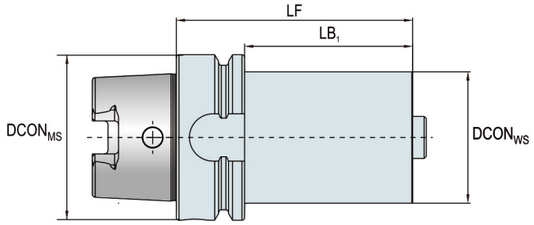

INTERNAL COOLANT FOR ROTATING OR STATIC TOOLS
COOLANT PRESSURE 100 BAR
ADAPTIVE INTERFACE MACHINE DIRECTION: HSK A/C/T

Order No.	Shank	Size(mm)				
		CZCMS	DCONMS	DCONWS	LF	LB1
751-01-001	HSK63T	PSC5	63	50	90	64
751-01-002	HSK63T	PSC6	63	63	110	—
751-01-003	HSK100T	PSC6	100	63	110	81
751-01-004	HSK100T	PSC8	100	80	120	91

HSK TO PSC ADAPTOR (SEGMENT CLAMPING)



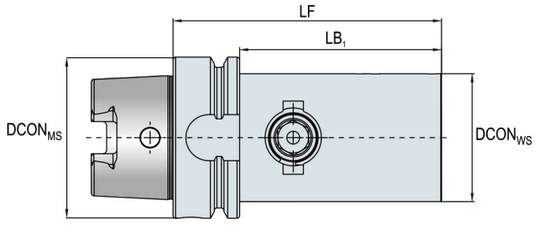

FOR ROTATING TOOLS ONLY
INTERNAL COOLANT
COOLANT PRESSURE 100 BAR
ADAPTIVE INTERFACE MACHINE DIRECTION: HSK A/C

Order No.	Shank	Size(mm)				
		CZCMS	DCONMS	DCONWS	LF	LB1
751-02-001	HSK63A	PSC5	63	50	115	89
751-02-002	HSK100A	PSC6	100	63	135	106
751-02-003	HSK100A	PSC8	100	80	165	136

* Other sizes on enquiry

HSK TO PSC ADAPTOR (BOLT CLAMPING)



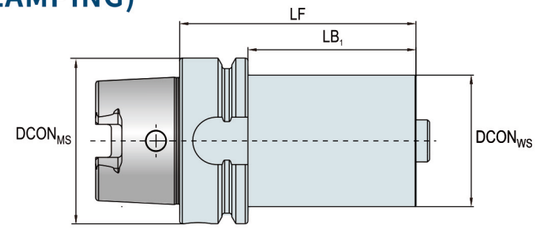

FOR ROTATING TOOLS ONLY
INTERNAL COOLANT
COOLANT PRESSURE 100 BAR
ADAPTIVE INTERFACE MACHINE DIRECTION: HSK A/C

Order No.	Shank	Size(mm)				
		CZCMS	DCONMS	DCONWS	LF	LB1
751-01-005	HSK63A	PSC3	63	32	75	49
751-01-006	HSK63A	PSC4	63	40	80	54
751-01-007	HSK63A	PSC5	63	50	90	64
751-01-008	HSK100A	PSC3	100	32	80	51
751-01-009	HSK100A	PSC4	100	40	90	61
751-01-010	HSK100A	PSC5	100	50	100	71
751-01-011	HSK100A	PSC6	100	63	110	81
751-01-012	HSK100A	PSC8	100	80	120	91
751-01-013	HSK100A	PSC10	100	100	155	—

PSC EXTENSION ADAPTOR (BOLT CLAMPING)



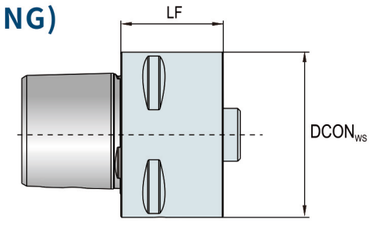

INTERNAL COOLANT
COOLANT PRESSURE 80 BAR
SEGMENT CLAMPING ONLY

Order No.	Shank	Size(mm)		
		CZCMS	DCONWS	LF
757-01-001	PSC3	PSC3	32	35
757-01-002	PSC4	PSC4	40	40
757-01-003	PSC5	PSC5	50	50
757-01-004	PSC6	PSC6	63	60
757-01-005	PSC8	PSC8	80	65

* Other sizes on enquiry

PSC EXTENSION ADAPTOR (BOLT CLAMPING)



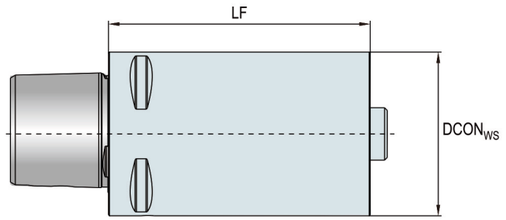

INTERNAL COOLANT
COOLANT PRESSURE 80 BAR

Order No.	Shank	Size(mm)		
		CZCMS	DCONWS	LF
756-01-001	PSC3	PSC3	32	60
756-01-002	PSC3	PSC3	32	80
756-01-003	PSC3	PSC3	32	95
756-01-004	PSC4	PSC4	40	60
756-01-005	PSC4	PSC4	40	80
756-01-006	PSC4	PSC4	40	120
756-01-007	PSC5	PSC5	50	80
756-01-008	PSC5	PSC5	50	100
756-01-009	PSC5	PSC5	50	150
756-01-010	PSC6	PSC6	63	100
756-01-011	PSC6	PSC6	63	140
756-01-012	PSC6	PSC6	63	185
756-01-013	PSC8	PSC8	80	100
756-01-014	PSC8	PSC8	80	125
756-01-015	PSC8	PSC8	80	200
756-01-016	PSC10	PSC10	100	140
756-01-017	PSC10	PSC10	100	200

* Other sizes on enquiry

PSC EXTENSION ADAPTOR (SEGMENT CLAMPING)



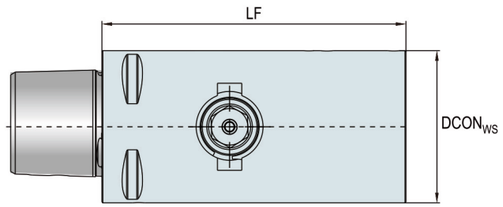

INTERNAL COOLANT
COOLANT PRESSURE 80 BAR

Order No.	Shank	Size(mm)		
		CZCMS	DCONWS	LF
756-02-001	PSC4-PSC4	PSC4	40	85
756-02-002	PSC5-PSC5	PSC5	50	100
756-02-003	PSC6-PSC6	PSC6	63	115
756-02-004	PSC8-PSC8	PSC8	80	145

* Other sizes on enquiry

PSC EXTENSION ADAPTOR (SEGMENT CLAMPING)



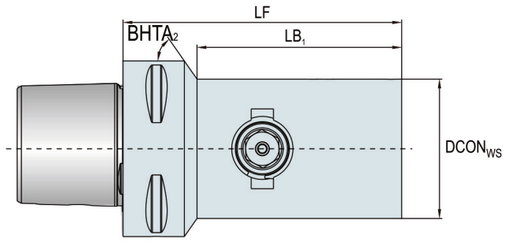

INTERNAL COOLANT
COOLANT PRESSURE 80 BAR

Order No.	Shank	Size(mm)				
		CZCMS	DCONWS	LF	LB1	BHTA2
756-02-005	PSC5-PSC4	PSC5	40	85	60.5	48°
756-02-006	PSC6-PSC5	PSC6	50	100	73	52°
756-02-007	PSC8-PSC6	PSC8	63	120	84.5	57°
756-02-008	PSC10-PSC8	PSC10	80	150	108	59°

* Other sizes on enquiry

PSC REDUCTION ADAPTOR (BOLT CLAMPING)



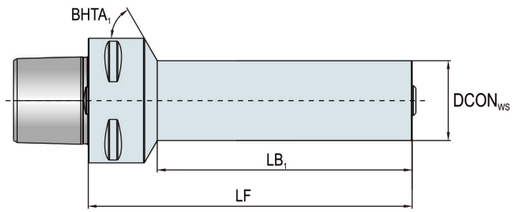

INTERNAL COOLANT
COOLANT PRESSURE 80 BAR

Order No.	Shank	Size(mm)				
		CZCMS	DCONWS	LF	LB1	BHTA1
756-01-018	PSC4-PSC3	PSC4	32	55	31	45°
756-01-019	PSC4-PSC3	PSC4	32	120	95.7	43°
756-01-020	PSC5-PSC3	PSC5	32	60	34.8	60°
756-01-021	PSC5-PSC3	PSC5	32	120	94.4	58°
756-01-022	PSC5-PSC4	PSC5	40	65	40	45°
756-01-023	PSC5-PSC4	PSC5	40	140	115.5	47°
756-01-024	PSC6-PSC3	PSC6	32	70	39	60°
756-01-025	PSC6-PSC3	PSC6	32	125	95.6	65°
756-01-026	PSC6-PSC4	PSC6	40	80	51.4	60°
756-01-027	PSC6-PSC4	PSC6	40	145	116.7	61°
756-01-028	PSC6-PSC5	PSC6	50	80	51.5	45°
756-01-029	PSC6-PSC5	PSC6	50	175	148.1	53°
756-01-030	PSC8-PSC3	PSC8	32	60	20.7	69°
756-01-031	PSC8-PSC3	PSC8	32	135	95.7	69°
756-01-032	PSC8-PSC4	PSC8	40	70	31.4	67°
756-01-033	PSC8-PSC4	PSC8	40	155	116.4	67°
756-01-034	PSC8-PSC5	PSC8	50	80	42.8	64°
756-01-035	PSC8-PSC5	PSC8	50	185	147.8	64°
756-01-036	PSC8-PSC6	PSC8	63	80	44.5	57°
756-01-037	PSC8-PSC6	PSC8	63	200	164.5	57°
756-01-038	PSC10-PSC6	PSC10	63	200	155.8	66°
756-01-039	PSC10-PSC8	PSC10	80	200	158.1	60°

* Other sizes on enquiry

PSC REDUCTION ADAPTOR (BOLT CLAMPING)



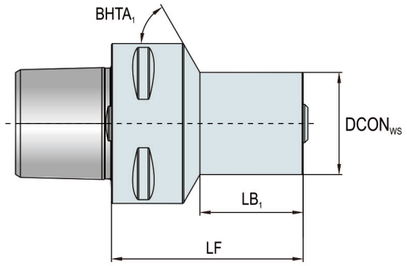

INTERNAL COOLANT
COOLANT PRESSURE 80 BAR

Order No.	Shank	Size(mm)				
		CZCMS	DCONWS	LF	LB1	BHTA1
756-01-040	PSC8-PSC6	PSC8	63	120	10	6°
756-01-041	PSC10-PSC3	PSC10	32	85	36.7	70°
756-01-042	PSC10-PSC4	PSC10	40	90	42.7	70°
756-01-043	PSC10-PSC5	PSC10	50	95	49.1	69°
756-01-044	PSC10-PSC6	PSC10	63	95	50.8	67°
756-01-045	PSC10-PSC8	PSC10	80	100	58.1	62°

* Other sizes on enquiry

PSC REDUCTION ADAPTOR (BOLT CLAMPING)



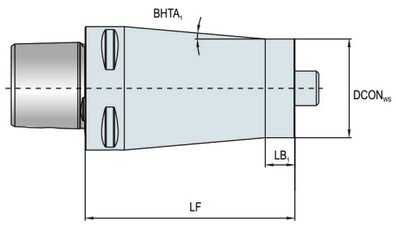

INTERNAL COOLANT
COOLANT PRESSURE 80 BAR

Order No.	Shank	Size(mm)				
		CZCMS	DCONWS	LF	LB1	BHTA1
756-01-046	PSC4-PSC3	PSC4	32	70	10	6°
756-01-047	PSC5-PSC3	PSC5	32	150	5	4°
756-01-048	PSC5-PSC4	PSC5	40	85	10	5°
756-01-049	PSC6-PSC3	PSC6	32	185	5	6°
756-01-050	PSC6-PSC4	PSC6	40	185	5	4°
756-01-051	PSC6-PSC5	PSC6	50	110	10	5°
756-01-052	PSC8-PSC4	PSC8	40	200	5	7°
756-01-053	PSC8-PSC5	PSC8	50	200	5	5°

* Other sizes on enquiry

PSC REDUCTION ADAPTOR (BOLT CLAMPING)



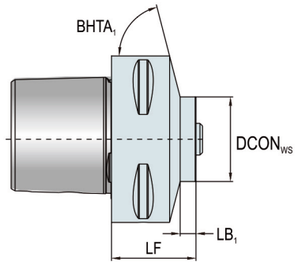

INTERNAL COOLANT
COOLANT PRESSURE 80 BAR
SEGMENT CLAMPING ONLY

Order No.	Shank	Size(mm)				
		CZC MS	DCONWS	LF	LB1	BHTA1
757-01-006	PSC5-PSC3	PSC5	32	33	5	49°
757-01-007	PSC5-PSC4	PSC5	40	40	15	45°
757-01-008	PSC6-PSC3	PSC6	32	32	6	76°
757-01-009	PSC6-PSC4	PSC6	40	40	11	59°
757-01-010	PSC6-PSC5	PSC6	50	50	20	40°
757-01-011	PSC8-PSC5	PSC8	50	45	5	57°
757-01-012	PSC8-PSC6	PSC8	63	55	15	41°
757-01-013	PSC10-PSC6	PSC10	63	55	14	75°
757-01-014	PSC10-PSC8	PSC10	80	65	25	71°

* Other sizes on enquiry